7. OPTIONAL EQ.

NO TILL COULTER
Unit Mounted

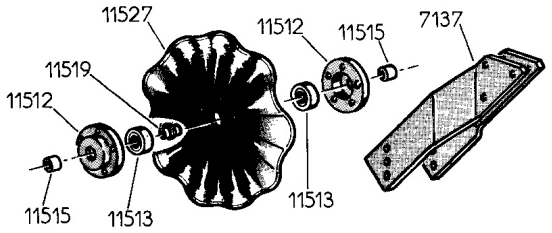

640652

PART No.	DESCRIPTION
7137	Unit mounting coulter support
11512	Hub Disc
11513	Bearing (6204 -2RS)
11515	Spacing Ring Coulter
11519	Spindle, Coulter blade
11527	Coulter blade, 14'
640652	Complete Coulter

SPACERS

Front and Rear Spacers are used to hang accessories from a 2" x 2" diamond toolbar.
The spacers are mounted on the 5" x 5" main frame toolbar.

PART No.	DESCRIPTION
900034.2	Front spacer, 2" x 2" Diamond bar for 7 x 7 planter.
900033.1	Rear spacer, 2" x 2" Diamond bar for 7 x 7 planter.

CLOD REMOVERS

The function of the clod remover is to clear the surface of the soil, but not plow a furrow. It is rigid and mounted in front of the disc openers that push clods away in preparation for the seed trench. The front brace of the clod remover is an independent adjustable opening knife that used to slice open hard soil and move stones away from the track of the disc opener. The clod remover should be adjusted according to soil type. The use of a clod remover in very rocky soils may be a problem due to clogging and blocking. In that event, it is better to mount a flexible support bracket for the clod remover as shown below.

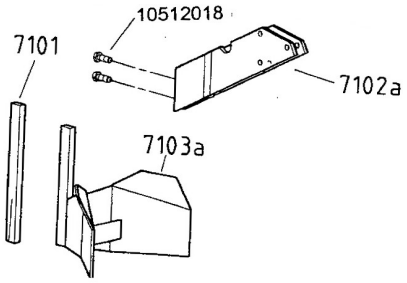

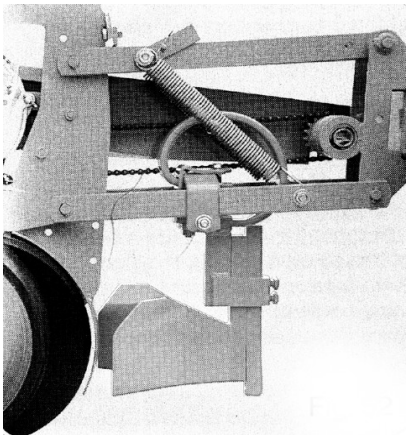

PART No.	DESCRIPTION
7101	Front point, clod remover
7102a	Mounting bracket, clod remover
7103a	Clod remover
10512018	Bolt , 10x35
650996	Complete clod remover

RESIDUE MANAGER

Residue managers are available for minimum and no-till situations.

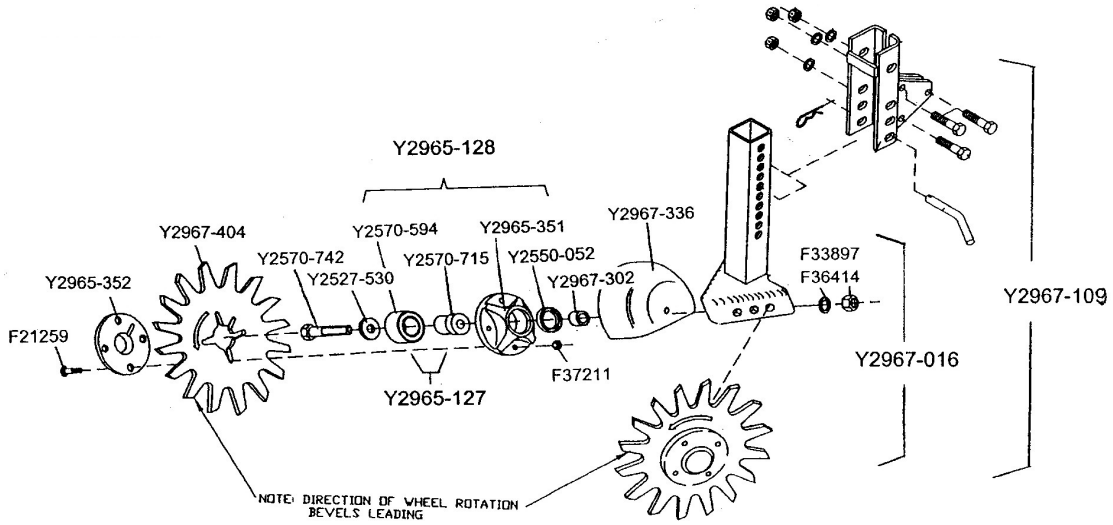

PART No.	DESCRIPTION
Y2967-109	**Residue manager assy complete w/ mnt bracket**
F13110	Bolt, 3/8 -16 x 1 3/4 Gr. 5
F13209	Bolt, 1/2- 13 x 1 1/2 Gr. 5
F13217	Bolt, 1/2- 13 x 3 1/2 Gr. 5
F21259	Carriage bolt, 5/16 -18 x 1 1/2 Gr. 5
F33861	Flat washer, 1/2
F33893	Lockwasher, 3/8
F33897	Lockwasher, 5/8"
F36406	Nut 3/8- 16
F36414	Nut, 5/8- 11
F37211	Rev lock nut, 5/16- 18
F37214	Rev lock nut, 1/2- 13
Y2526-402	Machine bushing, 9/16 ID x 1 3/4 OD x 1/4
Y2527-530	Machine bushing, 3/16"
Y2550-052	Seal for hub and bearing
Y2570-448	Hairpin, 1/8"
Y2967-404	Spoke wheel, 13" dia
Y2570-594	Bearing
Y2570-715	Insert for bearing
Y2570-742	D bolt, 5/8- 11 x 4" Gr. 5
Y2965-127	Bearing and insert assy
Y2965-128	Hub and bearing assy
Y2965-305	Pin
Y2965-351	Hub
Y2965-352	Hub cap
Y2967-016	Residue manager assu less mounting bracket
Y2967-200	Stem
Y2967-211	Mounting bracket for No-till parallel linkage
Y2967-245	Mounting bracket only
Y2967-302	Spacer, 3/4"
Y2967-336	Bearing shield

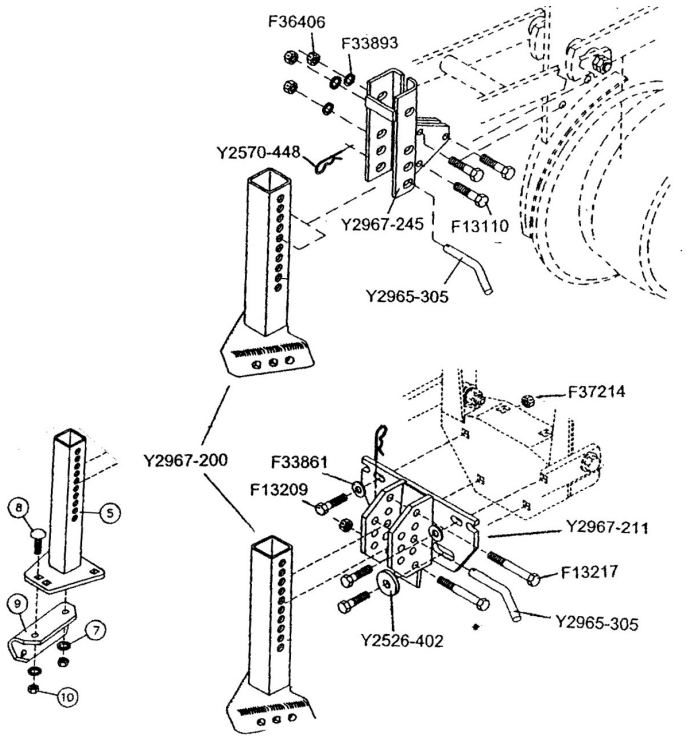

	PART No.	DESCRIPTION
5	Y2967-234	Single Wheel Arm WA
7	Y2525-352	1/2 Medium Lockwasher ZP
8	Y2505-339	1/2- 13 x 1 1/2 Car. Clt GR 5 ZP
9	Y2967-405	Wheel Mount
10	Y2520-352	1/2- 13 Hex nut ZP

7" X 7" Toolbar Frame

NO TILL LINKAGE

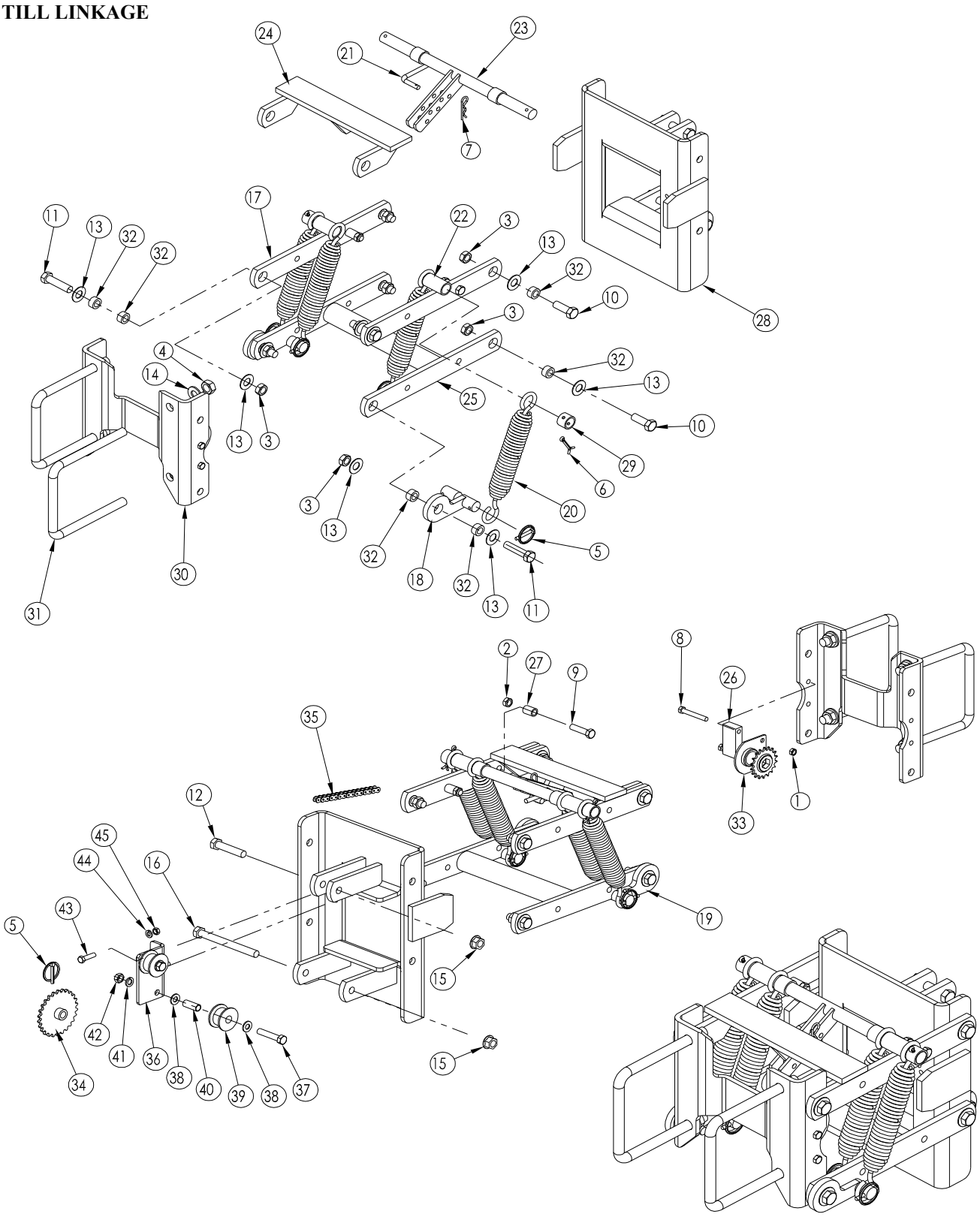

7" X 7" Toolbar Frame

NO TILL LINKAGE

ITEM	PART No.	DESCRIPTION
1	F37264	Top lock nut, 3/8-16
2	F37268	Top lock nut, 1/2-13
3	F37272	Top lock nut, 5/8-11
4	F37274	Top lock nut, 3/4-10
5	6077	Lynch pin, 1/4 x 1 1/4
6	F65147	Cotter pin, 1/4 x 2
7	L1-557-010403	Hairpin, 1/8
8	F13114	Hex bolt, 3/8-16 x 2 3/4
9	F13211	Hex bolt, 1/2-13 x 2
10	F13310	Hex bolt, 5/8-11 x 1 3/4
11	F13313	Hex bolt, 5/8-11 x 2 1/2
12	F13315	Hex bolt, 5/8-11 x 3
13	F33863	Washer 5/8"
14	F33864	Washer 3/4"
15	F37349	Nut, flange head 5/8-11
16	F13326	Hex bolt, 5/8-11 x 6 1/2
17	L124546	Parallel arm
18	L124591	Spring anchor LH
19	L124592	Spring anchor RH
20	L124630	Spring
21	L124643	Pin, spring adjustment
22	L124645	Spacer
23	L124686	Spring bar
24	L124687	Front bar
25	L124700	Lower parallel arm
26	L124708	Spacer block sprocket
27	L124709	Spacer bushing
28	L124729	Baseplate
29	L125007	Bushing
30	L125158	Mounting plate
31	4502.SA	U-bolt, 7 x 7 x 3/4
32	L71505214	Bushing 1" OD x 17/32"
33	KA1720	Bearing sprocket
34	7110.S	Sprocket, 27 tooth #41 chain
35	900259	Chain, #41 x 124 links
36	800310	Roller bracket
37	F13213	Hex bolt, 1/2-13 x 2 1/2
38	F33012	Washer, 1/2"
39	KD0916	Chain roller
40	E7523.1	Bushing, 38mm
41	F33626	Lock washer, 1/2"
42	F37214	Reversible lock nut, 1/2-13
43	F13107	Hex bolt, 3/8-16 x 1 1/4
44	F33622	Lock washer, 3/8"
45	F36406	Hex nut, 3/8-16
	L124846	Linkage and spring kit (less sprocket, chain, and rollers)

7” x 7” Toolbar Frame

ROW MARKER ADJUSTMENTS

The row marker length is determined by multiplying the number of rows by the row spacing (in inches). This figure should be equal to the distance from the end of the marker blade to the center line of the planter. Both the planter and the marker assembly should be lowered to the ground when measurements are taken. The measurement should be taken from the point where the blade contacts the ground. Adjust the left and right row markers equally to the determined length and securely tighten the clamping bolts.

Example:
# of Rows x Row Spacing (inches) = Dimension between Planter Center line and Marker Disc Blade.
6 rows x 30" row spacing = 180".

Row marker extension from center of planter to end of row marker blade should be 180".

WARNING To avoid injury, stand clear and keep others away when raising or lowering markers. Lock row markers for transport using the locking sleeve or locking pin.

WARNING Use extreme care when operating the row markers near electrical lines.

WARNING Hydraulic fluid escaping under pressure can penetrate the skin causing serious injury. Relieve pressure before disconnecting hydraulic lines. Tighten connections before applying pressure. If injured by escaping hydraulic fluid see a doctor at once. Gangrene can result. Wear proper hand and eye protection when searching for leaks. Use wood or cardboard instead of hands.

MARKER SPEED ADJUSTMENT

Markers come standard with automatic sequence valves. A flow control valve controls the lowering and raising speed of the markers. To adjust the marker speed, loosen the jam nut and turn the control clockwise, or in, to slow the travel speed. Turn the control counterclockwise, or out, to increase the travel speed. The adjusting bolt determines the amount of oil flow restriction through the flow control valve, therefore determining travel speed of the markers.

DANGER The flow controls should be properly adjusted before the marker assembly is first put into use. Excessive travel speed of the markers can be dangerous and/ or damage the marker assembly.

NOTE: When oil is cold, hydraulics operate slowly. Make sure all adjustments are made with warm oil.

NOTE: On a tractor where the oil flow can not be controlled, the rate of flow of oil from the tractor may be greater than the rate at which the marker cylinder can accept it. The tractor hydraulic control lever will have to be held until the cylinder reaches the end of its stroke. This occurs most often on tractors with an open center hydraulic system.

On tractors with a closed center hydraulic system, the tractor’s hydraulic flow control can be set so the tractor’s detent will function properly.

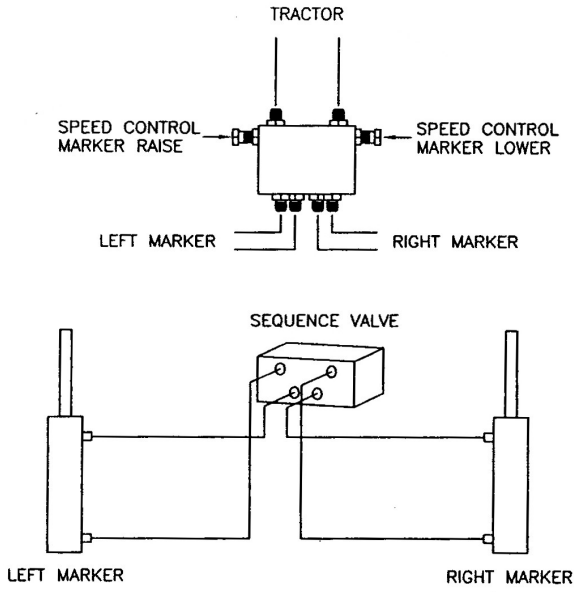

Single central marker sequence valve

7” x 7” Toolbar Frame

MARKER SEQUENCING,FLOW CONTROL VALVE
Valve Block Assembly Inspection

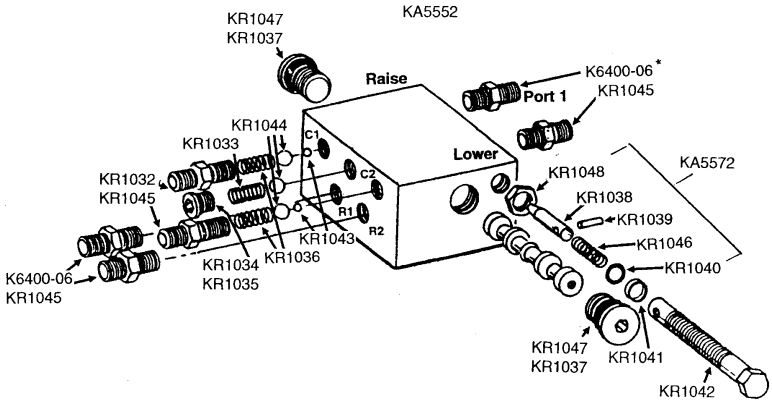

The valve block assembly consists of the marker sequencing and flow control valves in one assembly. The sequencing valve consists of a chambered body containing a spool and series of check valves to direct hydraulic oil flow. Should the valve malfunction, the components may be removed for inspection as follows:

1. Remove valve block assembly from planter.
2. Remove detent assembly and port adapter assemblies from rear of valve block.
3. Remove plug from both sides of valve block and remove spool.
4. Inspect all parts for pitting, contamination or foreign material. Also check seating surfaces inside the valve. Replace any parts found to be defective.
5. Lubricate spool with a light oil and reinstall. Check to be sure spool moves freely in valve body.

Important: Make sure the correct check ball(s) and spring are installed in each valve bore before reassembly.

PART No.	DESCRIPTION
KA5552	Valve assembly complete
KA5572	Flow control portion only
K10001	Hex head cap screws, 3/8" -16x 1"
K10203	Washer, 3/8" SAE
K10229	Lock washer 3/8"
*K6400-06	Connector with O-ring, 9/16" -18 male 37 JIC to 9/16" -18 O-ring
KR1032	Port adaptor with O-ring
KR1033	Detent spring
KR1034	Hex socket O-ring plug w/ O-ring
KR1035	O-ring
KR1036	Spring
KR1037	O-ring
KR1038	Needle
KR1039	Spring pin
KR1040	O-ring
KR1041	Teflon BU ring
KR1042	Ajdustment screw
KR1043	1/4" steel ball
KR1044	7/16" check ball
KR1045	O-ring
KR1046	Compression spring
KR1047	Hex socket plug with O-ring
KR1048	Hex jam nut, 1/2" -20

HYDRAULIC MARKER SYSTEM– Single Valve

With the single valve marker system, both markers can be used at the same time by first lowering the marker and moving the hydraulic control lever to the raise position and immediately returning it to the lower position. This will shift the marker control valve spool and the remaining marker will be lowered. This is useful in planting contours and terraces.
An additional control is required for the optional lift assist package unless it is tied into the tractor 3-point lift system. Check with you tractor dealer for parts required.

WARNING Always stand clear of marker assemblies and blades when planter is operating.

WARNING Always position lockups in “Safety” position when transporting or storing planter.

DANGER If a marker or wing lift cylinder has been removed for any reason, do not attach the rod end of the cylinder until the cylinder is cycled several times to remove any air that may be trapped in the system.

DANGER Serious injury or death can result from contact with electric lines. Use care to avoid contact with electric lines when moving or operating this machine.

7” x 7” Toolbar Frame

HYDRAULIC MARKER SYSTEM -Single Valve

ASSEMBLY

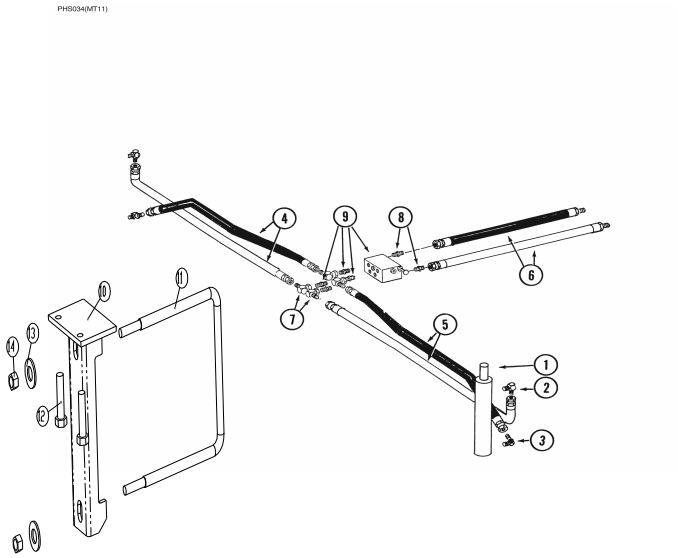

ITEM	PART No.	DESCRIPTION
1		See marker asm
2	J6801-08	Elbow fitting
3	J6400-08	Hydraulic fitting
4	11459.S	3/8” Hydraulic hose asm
5	11459.S	3/8” Hydraulic hose asm
6	11459.S	3/8” Hydraulic hose asm
7	J6500-08-06	Hydraulic fitting
8	J6400-08-06	Hydraulic fitting
9	KA5552	Sequence valve
10	4853	Mounting bracket
11	4647.SS	3/8 U-Bolt
12	F13105	Hex bolt 3/8-16 x 1
13	F33008	3/8 Washer
14	F37024	Nylock 3/8-16

TROUBLESHOOTING

If both markers are lowering, but only one is raising at a time

•The hoses from the cylinders to the valve may be connected backwards. Check the hose diagram in manual to correct.

If the same marker is always operating,

•The spool in sequencing valve may not be shifting. Remove spool and inspect for foreign material to make sure all ports in the spool are open. Clean spool and reinstall.

If both markers lower and raise at the same time

•There may be foreign material under the check ball in the sequencing valve. Remove and clean the hose fitting, spring and balls. Remove and clean the spool as well.

•Make sure there is not a ball missing or incorrectly installed I the sequencing valve. Disassemble and correct if this is the case.

Increase hydraulic flow, spool may not be shifting.

If the marker is setting down while in the raised position,

•The O-ring in the marker cylinder may be damaged or the piston may be cracked. Disassemble the cylinder to inspect for damage, repair any damage.

•The spool in sequencing valve may not be shifting completely because of a detent ball or because the spring is missing. Check the valve assembly and install parts as needed.

•The spool in sequencing valve may be shifting back towards the center position. Restrict the flow of hydraulic oil from the tractor to the sequencing valve.

If neither marker will move

•The flow control may be closed too much. Loosen the locking nut and turn the flow control adjustment bolt out, or counterclockwise, until the desired speed is set.

If the markers are moving too fast

•The flow control may be open too much. Loosen the locking nut and turn the flow control adjustment bolt in, or clockwise, until the desired speed is set.

If the marker operation speed is sporadically changing

•The needle may be sticking open in the flow control valve. Remove the flow control, inspect and repair or replace.

Marker Spindle / Hub / Blade

The marker blade is installed so the concave side of the blade is outward to throw dirt away from the grease seals. The spindle bracket is slotted so the hub and blade can be angled to throw more or less dirt. To adjust the hub and spindle, loosen the hardware and move the bracket as required. Tighten the bolts to the specified torque.

IMPORTANT: A marker blade assembly that is set at a sharper angle than necessary will add unnecessary stress to the complete marker assembly and shorten the life of bearings and blades. Set the blade angle only as needed to leave a clear mark.

A field test is recommended to ensure the markers are properly adjusted. After the field test is made, make any minor adjustments necessary.

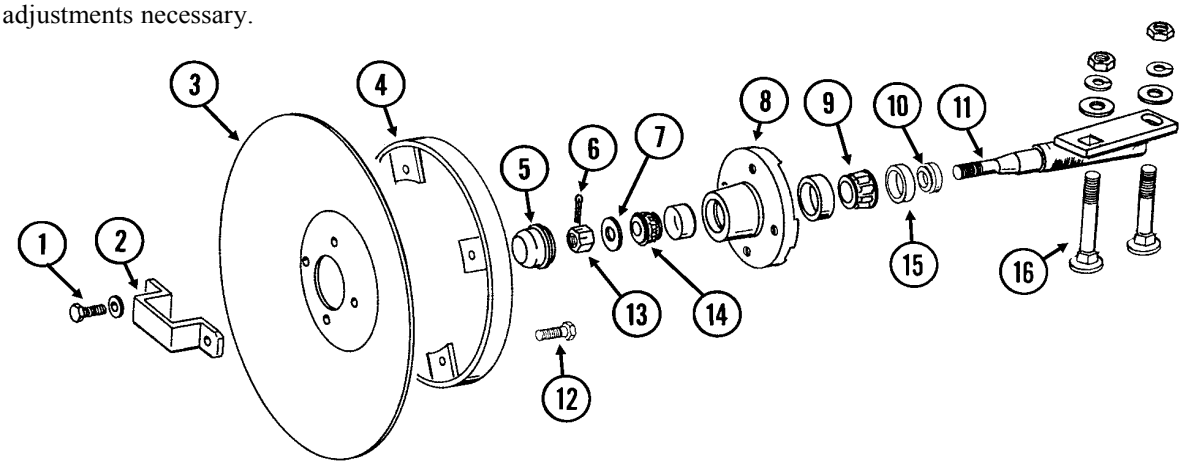

ITEM	PART No.	DESCRIPTION
1	K10722	Hex head cap screw, 1/2" -20x 1"
	W-5610	Lock washer, 1/2"
2	KD2597	Retainer
3	KD0746	Solid blade, 16" (shown)
	KD10283	Notched blade, 16" (Optional)
4	KA5853	Depth band
5	KD0840	Dust cap
6	K10544	Cotter pin, 5/32" x 1"
7	W-5410	Washer, 5/8" SAE
8	KA0167	Hub with cups
	KR0151	Outer cup
	KR0150	Inner cup
9	KA0245	Inner bearing
10	KA0899	Rubber seal
11	KA1676	Spindle, righthand
	KA1677	Spindle, lefthand
12	H-2100	Hex head cap screw, 5/16" -18x 1"
	K10109	Lock nut, 5/16"-18, grade 8
13	K10725	Hex slotted nut, 5/8" -18
14	KA0257	Outer bearing
15	KA0243	Grease seal
16	K10844	Carriage bolt, 1/2" -13x 3 1/2"
	K10168	Machine bushing, 1/2", 7 gauge
	W-4610	Lock washer, 1/2"
	N-4000	Hex nut, 1/2" -13
A.	KA1678	Hub and spindle assy, RH
	KA1679	Hub and spindle assy, LH
		(Items 1, 2, 5-11, and 13-15)

7" x 7" Single Fold Row Marker

ASSEMBLY

ITEM	PART No.	DESCRIPTION
1	KD0453-02	Extension tube 4R30
	KD0453-07	Extension tube 4RW/6R30
2	KD2721	U bolt, 2" x 2"x 1/2 -13
	K10228	Lock washer, 1/2"
	K10102	Hex nut, 1/2" -13
3	KA5175	Arm 4R30
	KA5184	Arm 4RW
	KA5183	Arm 6R30
	K10640	Grease fitting, 1/4" -28
4	KD0462	Safety lockup pin
	K10670	Hair pin clip, No. 3
	K10187	Spring pin, 5/32" x 2"
5	KA5177	Mount 4R30
	KA5178	Mount 6R30
	K10640	Grease fitting, 1/4" -28
6	KD0438	Pin, 13 1/2"
	K10460	Cotter pin 1/4x2"
7	K10133	Hex head cap screw, 5/16" -18x 1 1/2"
	K10109	Lock nut, 5/16" -18
8	KD5892	Hose clamp, 5/8" x 1 1/2" x 1 1/2"
9	K10008	Hex head cap screw, 5/8" -11x 2"
	K10230	Lock washer 5/8
10	KA8919	Cylinder
11	KR0367	Pin, 2 7/8"
	KR0193	Clip
12	KR0375	Pin, 3 1/2"
	KR0193	Clip

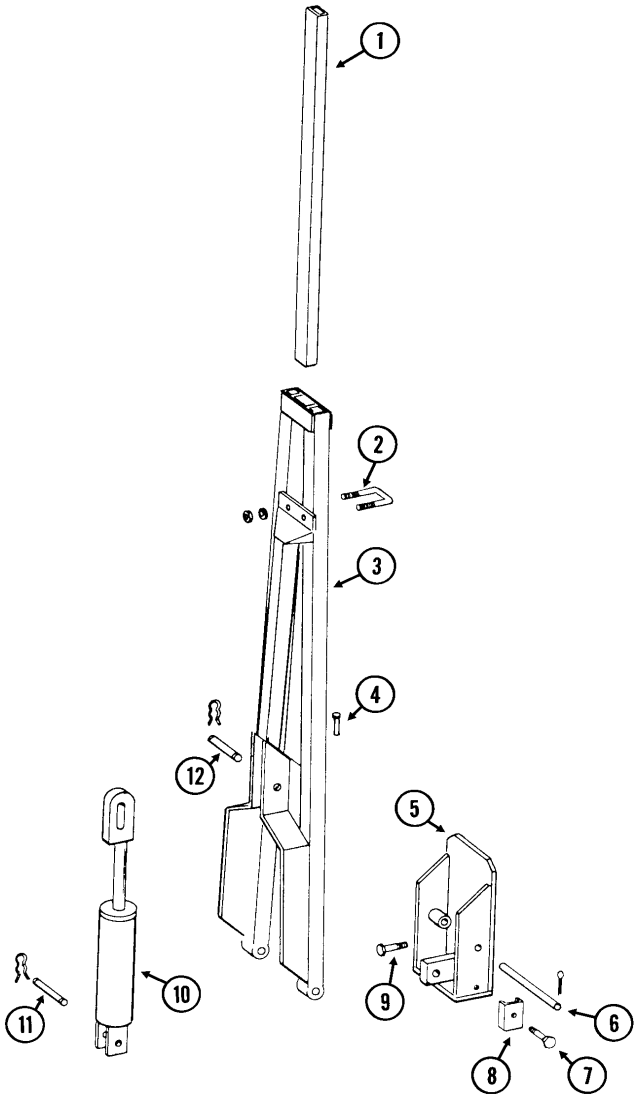

SINGLE FOLD MARKER CYLINDER

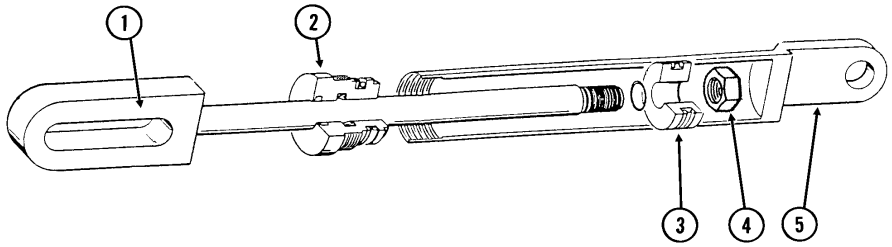

ITEM	PART No.	DESCRIPTION
	KA8919	Cylinder complete, 2" x 8"
1	KA8918	Rod assembly
2	KD12510	Gland
3	KD12511	Piston
4	K10967	Lock nut, 3/4" -16
	KR1529	Seal kit, includes 1 T seal, 2 O-rings, 1 BU ring, 1 U cup, 1 wiper

7" x 7" Two Fold Row Marker

ITEM	PART No.	DESCRIPTION
1	KD0453-03	Extension tube 6RW/8R30
2	K10226	Washer, 1 1/4" SAE
3	KA5173	First stage arm w/ grease fittings
	K10641	Grease fitting, 1/8" NPT
4	KA9443	Cylinder
5	KD15386	Pin, 1 1/4" x 7 5/8"
	K10460	Cotter pin, 1/4"x 2"
6	KD5875	Hose clamp
7	K10133	Hex head cap screw, 5/16" -18x 1 1/2"
	K10109	Lock nut, 5/16" -18
8	KD0652	Pin, 1 1/4" x 9 1/2"
	K10460	Cotter pin, 1/4"x 2"
9	K10879	Flanged 12 point bolt 5/8" -11x2
10	KA5130	Mount
11	KD3214	Pin, 1 1/4" x 12 1/4"
	K10460	Cotter pin, 1/4"x 2"
12	KD2161	Pin, 1 1/4" x 8 1/4"
	K10460	Cotter pin, 1/4"x 2"
13	KD2721	U bolt, 2"x 2"x 1/2" -13
	K10228	Lock washer, 1/2"
	K10102	Hex nut, 1/2" -13
14	KA5190	Second stage arm 6R36/38
	KA5188	Second stage arm 8R30
15	KD0752-41	Sleeve 1" (if applicable)

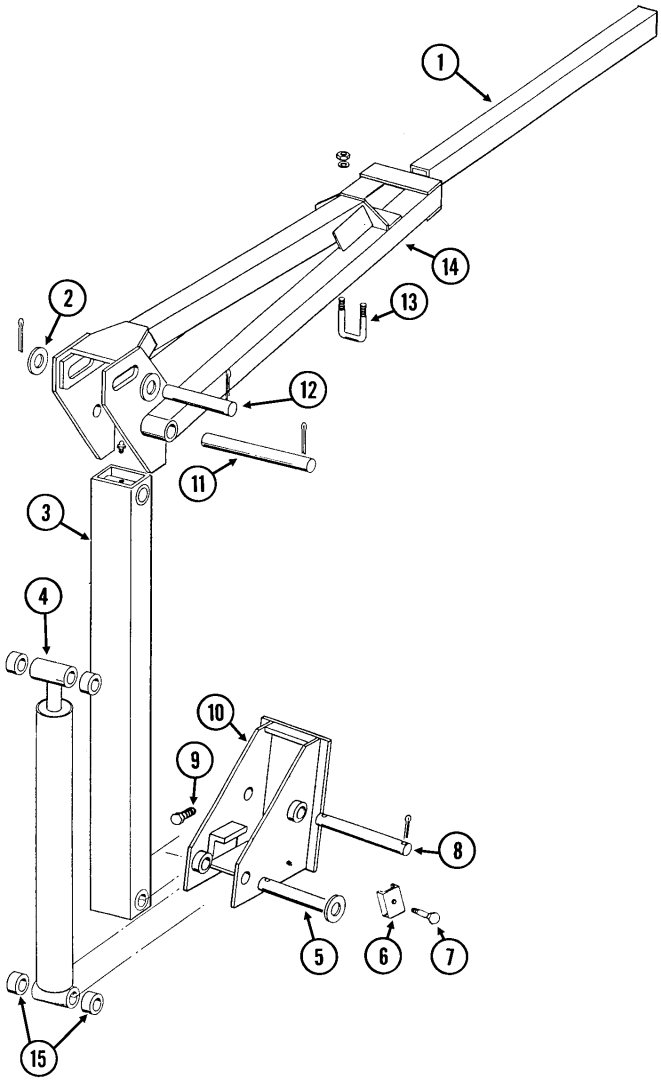

TWO FOLD MARKER CYLINDER

3/4" - 16 O-Ring Ports

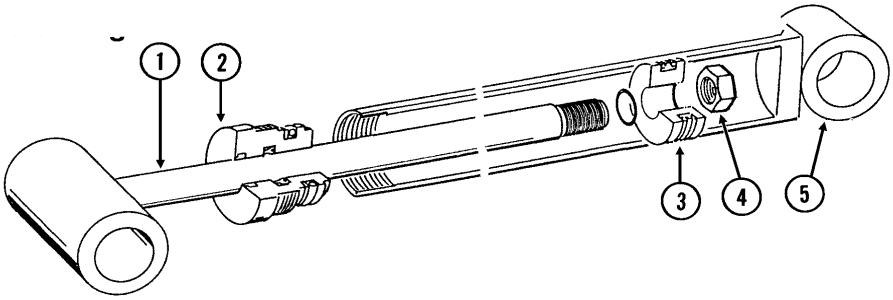

ITEM	PART No.	DESCRIPTION
	KA9443	Cylinder complete, 2" x 20 1/16"
	KA9440	Rod assembly
	KD12510	Gland
3	KD12511	Piston
4	K10967	Lock nut, 3/4" -16
	KR1529	Seal kit, includes 1 T seal, 2 O-rings, 1 BU ring, 1 U cup, 1 wiper

SYSTEM ASSEMBLY

The ¼" vacuum hose connects to the bottom port in the back of the vacuum gauge. The filter is to be used in the top port in back of the vacuum gauge. Use plugs in the side ports.

The ¼" pressure hose connects to the top port in the back of the vacuum gauge. Use the filter in the bottom port in back of the vacuum gauge. Use plugs in the side ports.

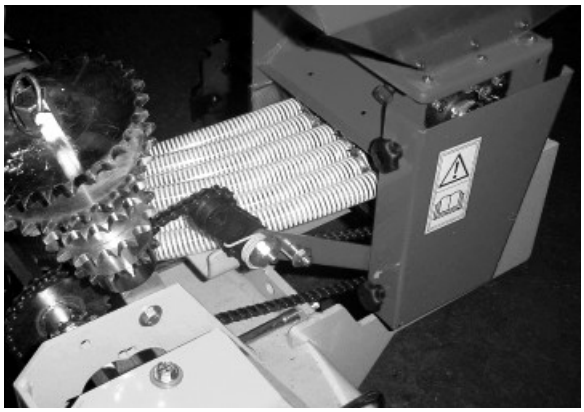

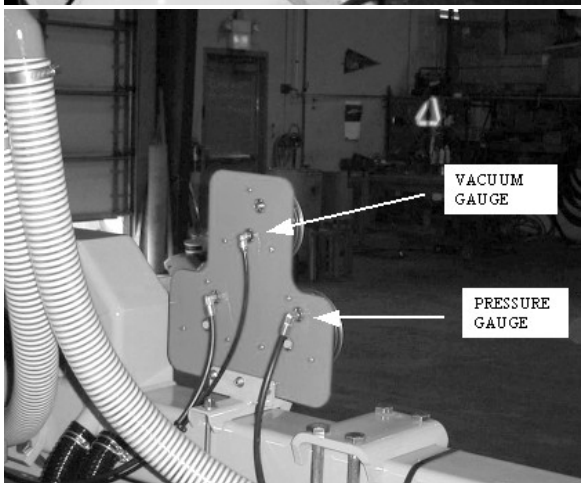

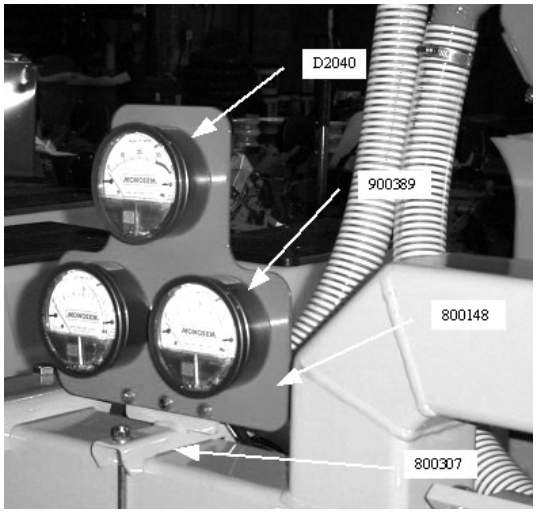

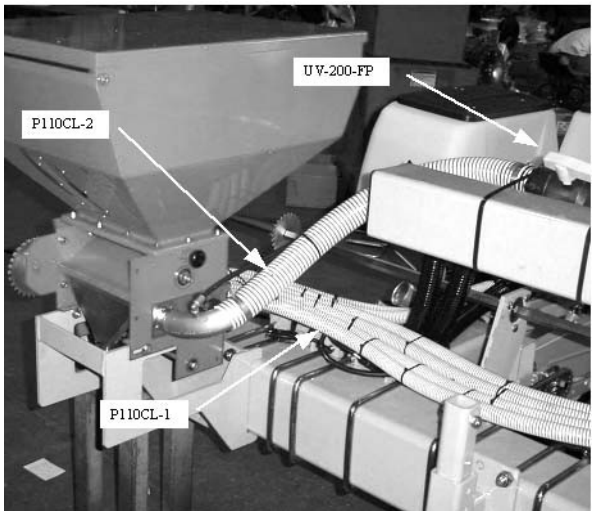

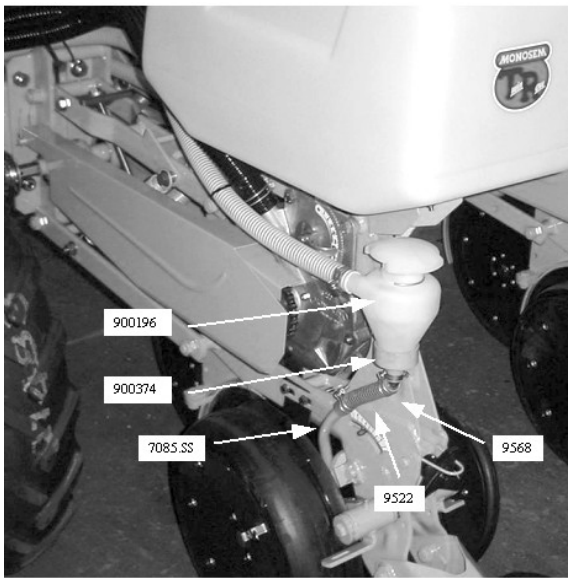

PART NO.	DESCRIPTION
D2040	Vacuum Gauge
90389	Pressure Gauge
800148	Panel Triple Gauge
800307	Bracket Gauge panel
UV-200-FP	2" Ball valve, (requires Fitting TERHB200-200, qty 2)
P110CL-2	2" Hose (Specify Length)
P110CL-1	1" Hose (Specify Length)
UV-200-FP	2" Ball valve, (requires Fitting TERHB200-200, qty 2)
P110CL-2	2" Hose (Specify Length)
P110CL-1	1" Hose (Specify Length)
900196	Cyclone (includes fitting)
900374	Cyclone clamp
7085.SS	Drop tube
9522	Hose (Specify Length
9568	Hose Clamp

Double Turbofan

PART No.	DESCRIPTION
4401.B	Fan housing (support frame side)
4402.C	Fan housing manifold side
4405.A	Lower shaft (1 3/8" 6 spline adapter)
4407	Bearing 62mm (62062RS)
4408	Bearing 72mm (63062RS)
4409	Snap ring internal 72mm
4410	Spacer upper shaft
4411	Spacer lower shaft
4412.B	Pulley, 500/540rpm
	Hi-Output 25 grooves 290mm dia.
4413.B	Fan belt, 25 grooves (1244JEJ151)
4437	Key lower shaft (8x7x40mm)
4439.A	Key upper shaft (6x6x45mm)
4440	Special bolt tension adjustment
4452.B	Upper shaft, 25 grooves 29mm dia.
10020595	Lower spacer segment
10020596	Upper spacer segment
10020597	Front spacer segment
10020598	Divider plate
10603010	Nut, 10mm
10603014	Nut, 14mm
10603020	Nut, 20mm
10629007	Washer, 6mm
10629009	Washer, 8mm
10629013	Washer, 12mm
20047970	Lift hook
20048560	Support bar
20048570	Belt guard
20051760	Anti vibration strap
30502016	Bolt, 12 x 25mm
30507076	Bolt, 14 x 25mm
30510099	Bolt, 6 x 40mm
30511000	Bolt, 6 x 45mm
30512021	Bolt, 10 x 50mm
30512080	Bolt, 14 x 45mm
30561061	Carriage bolt, 8 x 50mm
30561062	Carriage bolt, 8 x 55mm
30562047	Carriage bolt, 12 x 30mm
30600006	Nut, 6mm
30600008	Nut, 8mm
30600012	Nut, 12mm
30600014	Nut, 14mm
30620089	Washer, 10.5 x 20 x 2mm
30620095	Washer, 10.5 x 27 x 2mm
30621046	Washer, 13 x 27 x 2mm
30621061	Washer, 13 x 40 x 4mm
30623043	Washer, 22.5 x 48 x 4mm
30624015	Washer, 31 x 41 x 1.5mm
30624016	Washer, 31 x 41 x 2mm
40090315	Screw, 12 x 30mm
65004042	Double fan blade
66005121	Support frame
66009197	Lower bearing housing

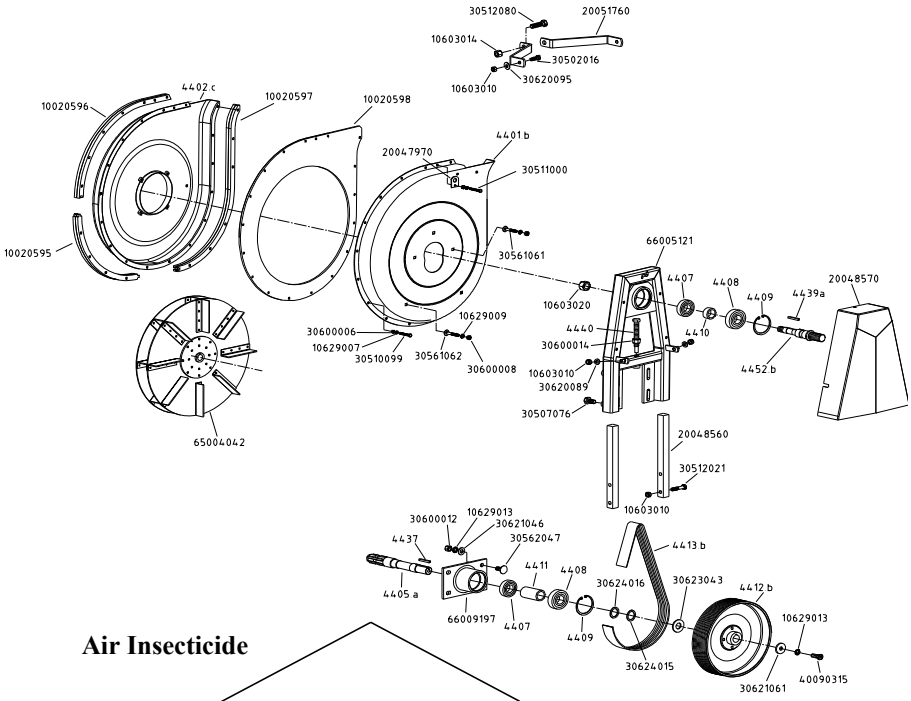

Air Insecticide

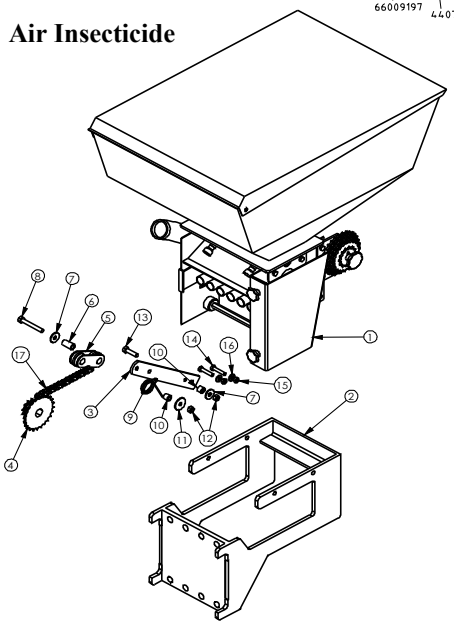

ITEM	PART No.	DESCRIPTION
1	641400	Air Insecticide hopper w/ meter
2	800261	Hopper bracket
3	800123	Idler support arm
4	9555.A	Double Sprocket 12-25
5	KD11962	Idler, US Insect
6	KD1026	Long sleeve tube
7	F33008	3/8" Flat washer
8	F15114	3/8" x 2 3/4" Bolt
9	KD9306	Spring, US Insecticide Idler
10	KD2971-10	Short sleeve tube
11	K10210	3/8" Large Flat washer
12	F37212	3/8" Center lock nut
13	F13109	3/8" x 1 1/2" Bolt
14	F13059	5/16" x 1 1/2" Bolt
15	F37211	5/16" Center lock nut
16	F33114	5/16" Flat washer

AIR INSECTICIDE SYSTEM

Twin-Row

ASSEMBLY

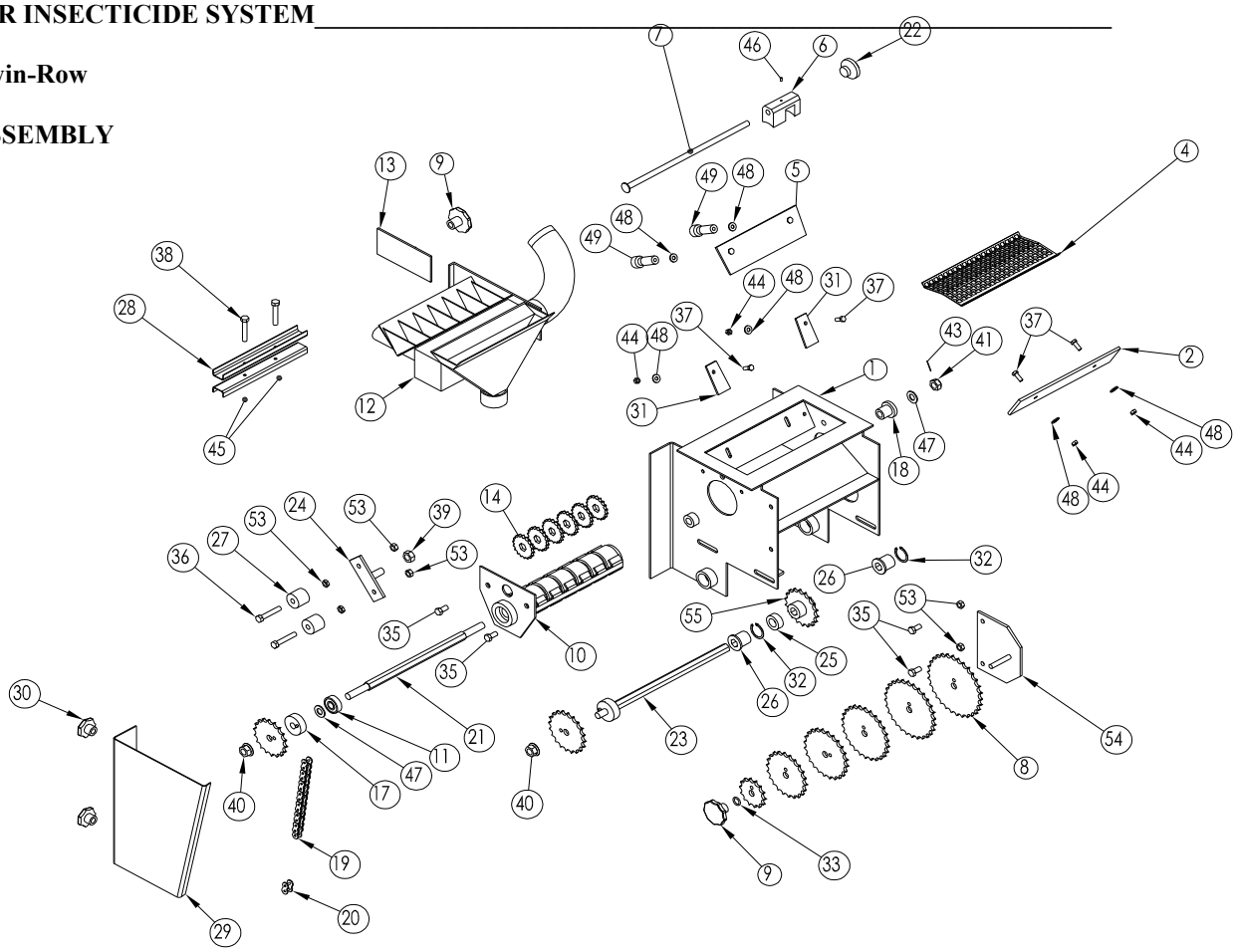

ITEM	PART No.	DESCRIPTION
1		Main housing
2		Stainless steel plate
3		Guard
4		Screen
5		Clean out trapdoor
6		Shut off gate to create 4 or 6 outlet
7		Shaft for shut off gate
8	7701.14	Sprocket, 14T, 5R
	7701.16	Sprocket, 16T, 5R
	7701.18	Sprocket, 18T, 5R
	7701.20	Sprocket, 20T, 5R
	7701.22	Sprocket, 22T, 5R
	7701.24	Sprocket, 24T, 5R
	7701.26	Sprocket, 26T, 5R
	7701.28	Sprocket, 28T, 5R
	7701.30	Sprocket, 30T, 5R
27	7714	Plastic chain idler tensioner
28		Support plates for hose
29		Chain guard
30	7715	Threaded knob, 8mm
31		Corner plate for clean out door
32	7716	Snapring, external, 24mm
33	7717	O ring, 12mm ID
35		Hex bolt, 8 x 16mm
36		Hex bolt, 8 x 45mm
37		Hex bolt, 6 x 16mm
38		Hex bolt, 5 x 40mm
39		Hex nut, 12mm
40	7718	Hex nut, 12mm w/ washer

ITEM	PART No.	DESCRIPTION
9	7702	Sprocker carrier w/threaded knob
10	7703	Rotor weldment
11	7704	Bearing, 6201, 12x 32x 10mm wide
12		Venturi manifold w/ 6 outlets
13		Plate with weldment, 8mm stud bolt
14	7705.5	Serrated roller, 5mm
17	7706	Hub w/ locator pin, 12 mm ID
18	7707	Plastic bushing, 12 mm ID
19	10107	Roller chain, 5R
20	10111	Connecting link, 5R
21	7708	Meter shaft, 15mm hex w/ 12mm thread
22	7709	Threaded knob, 10mm
23	7710	Hex shaft, 14mm w/ hub & locator pin
24	7711	Chain tensioner bracket
25	7712	Aluminum lock collar w/ set screw
26	7713	Plastic bushing, w/ 14 mm hex bore
41		Nylon locknut, 12mm w/ hole for roll pin
42		Set screw w/ spring loaded ball end, 6mm
43		Roll pin, 3 x 20mm
44		Hex nut, 6mm
45		Nylon locknut, 5mm
46		Set screw, 6 x 1 mm
47		Flat washer, 12 x 24 x 2mm
48		Flat washer, 6.5 x 15 x 1.5mm
49	7719	Threaded knob, 6mm
53		Hex nut, 8mm
54		Sprocket storage bracket
55	4426.18	Sprocket, 18T, bottom hex shaft

Twin-Row

AIR INSECTICIDE APPLICATION RATES

Double sprocket on hex shaft and changeable sprockets on 6 outlet insecticide metering boxes.

Rates are in pounds per acre

These settings are theoretical and approximate. Actual output may vary.

TEMIK 15G Gypsum

		Double Sprocket: 12							
		Sprockets on insecticide meter box							
Driver		14	14	14	14	28	30	22	26
Driven		30	26	22	16	30	28	18	18
Row Spacing	36"	8.9	10.3	12.2	16.8	17.9	20.5	23.4	27.7
	38"	8.5	9.8	11.5	15.9	16.9	19.4	22.2	26.2
	40"	8	9.3	11	15.1	16.1	18.5	21.1	24.9

TEMIK 15G Grit

		Double Sprocket: 12							
		Sprockets on insecticide meter box							
Driver		14	14	14	14	28	30	22	26
Driven		30	26	22	16	30	28	18	18
Row Spacing	36"	3.6	4.2	4.9	6.8	7.2	8.3	9.4	11.1
	38"	3.4	3.9	4.7	6.4	6.8	7.8	8.9	10.6
	40"	3.2	3.7	4.4	6.1	6.5	7.4	8.5	10

COUNTER 15G

		Double Sprocket: 12							
		Sprockets on insecticide meter box							
Driver		14	14	14	14	28	30	22	26
Driven		30	26	22	16	30	28	18	18
Row Spacing	36"	5.4	6.2	7.4	10.1	10.8	12.4	14.1	16.7
	38"	5.1	5.9	7	9.6	10.2	11.7	13.4	15.8
	40"	4.9	5.6	6.6	9.1	9.7	11.2	12.7	15

THIMET 20G

		Double Sprocket: 12							
		Sprockets on insecticide meter box							
Driver		14	14	14	14	28	30	22	26
Driven		30	26	22	16	30	28	18	18
Row Spacing	36"	5.5	6.3	7.5	10.2	10.9	12.5	14.3	16.9
	38"	5.2	6	7.1	9.7	10.4	11.9	13.6	16
	40"	4.9	5.7	6.7	9.2	9.8	11.3	12.9	15.2

Twin-Row

MICROSEM SYSTEM

The microsem system meters microgranular products such as insecticide and herbicide with precision. The system is ground driven and has a positive displacement. The output is set by means of a transmission that is unaffected by a change in planting speed. The microsem system is mounted to the toolbar frame with support brackets to reduce weight on the planter unit. The microsem system with auger is equipped with a telescoping outlet, and its output starts from a minimum of 2-3 lbs/acre.

Each microsem hopper has a 33 lb. capacity and can be used with a double outlet for two row units or with a single outlet for one row unit.

The drive sprocket is mounted on the upper hex shaft. The hoses direct the granular product directly between the disc openers via drop tubes, or behind the disc openers via a spreader tube.

INSECTICIDE DROP TUBE

7085.SD Mounts on the right hand side of the unit, towards the front with a single bolt. It then curves down thru a notch cut into the shield covering the front of the double disc opener. It deposits material into the seed trench in front of the seed tube. This tube is used on the set back unit on twin-row machines. The top of the tube curves to the left to accept the feeder hose coming down on the left hand side of the parallel linkage.

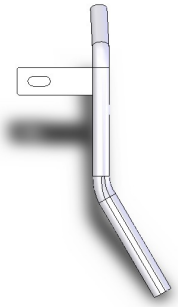

7085. SU Mounts on the right hand side of the unit, towards the front with a single bolt. It then curves down thru a notch cut into the shield covering the front of the double disc opener. It deposits material into the seed trench in front of the seed tube. This tube is used on the set back unit on twin-row machines. The top of the tube extends straight up to accept the feeder hose coming through the middle of the parallel linkage.

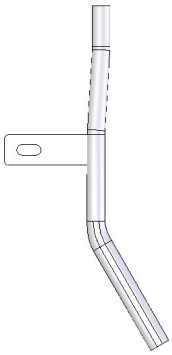

7085.DA Mounts on the right hand side of the unit, with the same bolts that attach the disc scraper. It deposits material down in the seed trench behind the seed tube. The top of the tube points straight up.

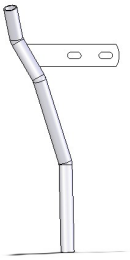

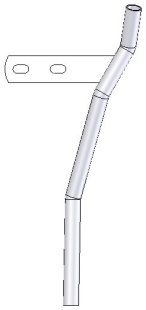

7085.GA Mounts on the left hand side of the unit, with the same bolts that attach the disc scraper. It deposits material down in the seed trench behind the seed tube. The top of the tube points straight up.

7085.SS Mounts on the left hand side of the unit, with the same bolts that attach the disc scraper. It deposits material down in the seed trench behind the seed tube. The top of the tube curves towards the rear to accept the feeder hose from the Air Insecticide System.

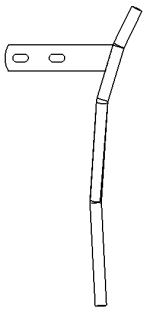

Twin-Row

SETTING THE OUTPUT

The output is a function of the number of rotations of the spindle of the metering boxes, which is set primarily with the double sprocket (1) and the interchangeable sprockets (2). The chart provided will assist with the setting and also indicates the sprockets to be used for the principle commercial products. The furnished information is a recommendation only.

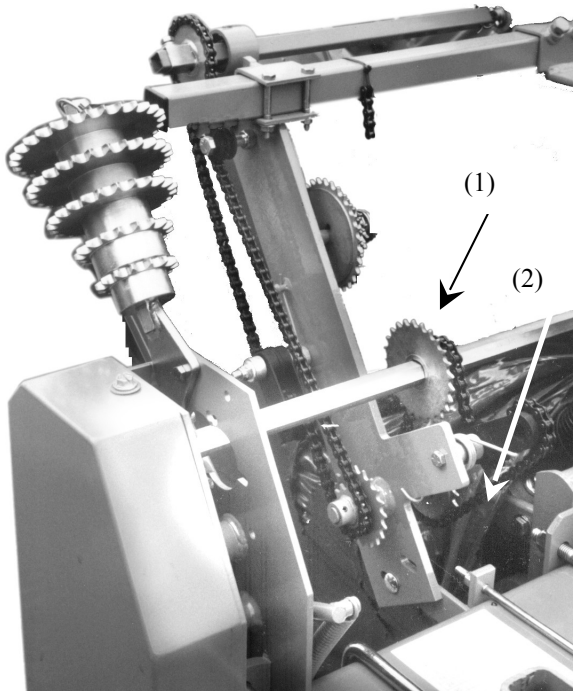

NOTE: Avoid moisture contamination. Moisture in the product will cause hardening and could cause chain breakage. To avoid this problem, empty hoppers and store in a dry place.

NOTE: This unit should be used only with microgranulars and not with powders or granulates. It is possible to meter large granulars provided the inside auger is changed for a special one.

WARNING Agricultural chemicals can be dangerous. Improper use can result in injury to persons, animals and soil. Handle with care and follow instructions of the chemical manufacturer.

HOW TO TEST FOR INSECTICIDE RATES

Measure out a distance of 328 feet (100m).

Set the sprocket combination to: A=12, B=30, C=12. (This ratio = 0.24 or the number of Microsem shaft rotations for 1 drive wheel rotation.)

Remove the hoses from a 2-outlet hopper, placing a bag or other container to catch the product. Put the product into the Microsem hopper. Engage the Microsem and drive forward the pre-measured distance. Weigh the amount of product caught in the container and convert to grams.

Ounces x 31.103481 = grams Inches x 2.54 = cm

Use the following formula:

$$\text{Output} = \frac{10 \times \text{quantity weighted (g)}}{\text{Inter-rows (cm)} \times 2}$$

Example:

Inter-rows = 60 cm (23.63")
Quantity weighed = 60 grams (1.929 oz)

If you require 8 kg/ha or 8 lb/acre, choose the ratio $\frac{8}{5} \times 0.24 = 0.384$ A=12, B=18, C=12 If you require 11 kg/ha or 11 lb/acre, choose the ratio $\frac{11}{5} \times 0.24 = 0528$ A=12, B=22, C=20

$$\text{Output} = \frac{10 \times 60}{60 \times 2} = 5 \text{ kg/ha or } 5 \textbf{ lb/acre}$$

From the following chart, find the closest sprocket combination to achieve appropriate lbs/acre.

Note: Because of the large variety of insecticides and its density and irregularity of granulars, it is impossible to provide an exact chart. This is a close approximation only.

Twin-Row

Possible Sprocket Combinations			Ratios Obtained
A	**B**	**C**	
12	35	12	---------- 0.21
12	32	12	---------- 0.22
12	**30**	12	---------- 0.24
12	**25**	12	---------- 0.29
12	**22**	12	---------- 0.33
12	20	12	---------- 0.36
12	**18**	12	---------- 0.40
12	16	12	---------- 0.45
12	**15**	12	---------- 0.48 or
12	25	20	---------- 0.48
12	23	20	---------- 0.51
12	**22**	20	---------- 0.54
12	21	20	---------- 0.57
12	**12**	12	---------- 0.60
12	24	12	---------- 0.63
12	**18**	21	---------- 0.66
25	**22**	12	---------- 0.68
12	10	12	---------- 0.72
25	20	12	---------- 0.75
12	**15**	20	---------- 0.80
25	**18**	12	---------- 0.83
25	16	12	---------- 0.94
25	**15**	12	---------- 1 or
12	12	20	---------- 1
25	**22**	20	---------- 1.13
12	10	20	---------- 1.20
25	**12**	12	---------- 1.25
25	**18**	20	---------- 1.40
25	10	12	---------- 1.50
25	**15**	20	---------- 1.66
25	**12**	20	---------- 2.08
25	10	20	---------- 2.50

Less Product

Note: The bold sprocket numbers for the interchangeable B sprocket are standard.

The remaining sprockets for the interchangeable B sprocket are available on request.
(13-14-16-23-26-35)

More Product

TWIN-ROW MICROSEM SETTING CHART - Drive sprockets to be used

These settings are theoretical and approximate. Actual output may vary. Other outputs can be obtained by using different sprocket arrangements of the Microsem drive, however travel speed variations will not affect the output.

A = Double sprocket on hex shaft - driven 1
B = Interchangeable sprocket - driven 2
C = 12 or 20 tooth sprocket

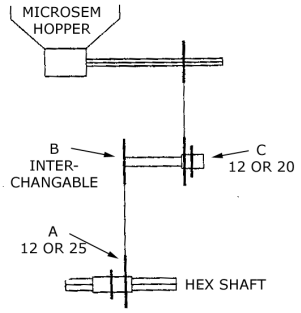

		A / B / C	A / B / C	A / B / C	A / B / C	A / B / C	A / B / C
#'s per acre		**4.8**	**5.4**	**6.2**	**7.2**	**8.1**	**9.0**
THIMET 20G	36"	12 / 25 / 12	12 / 22 / 12	12 / 18 / 12	12 / 16 / 12	12 / 23 / 20	12 / 21 / 20
	38"	12 / 22 / 12	12 / 20 / 12	12 / 16 / 12	12 / 25 / 20	12 / 22 / 20	12 / 12 / 12
	40"	12 / 20 / 12	12 / 18 / 12	12 / 15 / 12	12 / 23 / 20	12 / 21 / 20	25 / 24 / 12
#'s per acre		**7.1**	**8.5**	**9.5**	**10.8**	**11.6**	**13.2**
FURADAN 15G	36"	12 / 30 / 12	12 / 25 / 12	12 / 22 / 12	12 / 20 / 12	12 / 18 / 12	12 / 16 / 12
	38"	12 / 27 / 12	12 / 22 / 12	12 / 20 / 12	12 / 18 / 12	12 / 16 / 12	12 / 23 / 20
	40"	12 / 25 / 12	12 / 20 / 12	12 / 18 / 12	12 / 16 / 12	12 / 23 / 20	12 / 22 / 20
#'s per acre		**4.7**	**5.5**	**6.3**	**7.3**	**7.8**	**9.0**
COUNTER 15G	36"	12 / 25 / 12	12 / 20 / 12	12 / 18 / 12	12 / 15 / 12	12 / 23 / 20	12 / 12 / 12
LORSBAN 15G	38"	12 / 22 / 12	12 / 18 / 12	12 / 15 / 12	12 / 23 / 20	12 / 22 / 20	25 / 24 / 12
	40"	12 / 20 / 12	12 / 15 / 12	12 / 23 / 20	12 / 22 / 20	12 / 12 / 12	12 / 18 / 20
#'s per acre		**6.5**	**7.8**	**8.9**	**9.7**	**10.8**	
TEMIK 15G	36"	12 / 30 / 12	12 / 25 / 12	12 / 22 / 12	12 / 20 / 12	12 / 18 / 12	
	38"	12 / 27 / 12	12 / 22 / 12	12 / 20 / 12	12 / 18 / 12	12 / 16 / 12	
GYPSUM	40"	12 / 25 / 12	12 / 20 / 12	12 / 18 / 12	12 / 16 / 12	12 / 15 / 12	
#'s per acre		**5.2**	**6.3**	**7.1**	**8.6**	**10.3**	
AMEBIN	36"	12 / 30 / 12	12 / 25 / 12	12 / 22 / 12	12 / 18 / 12	12 / 15 / 12	
	38"	12 / 25 / 12	12 / 22 / 12	12 / 18 / 12	12 / 16 / 12	12 / 23 / 20	
	40"	12 / 22 / 12	12 / 18 / 12	12 / 16 / 12	12 / 15 / 12	12 / 22 / 20	

TWIN-ROW MICROSEM SETTING CHART - Drive sprockets to be used

These settings are theoretical and approximate. Actual output may vary. Other outputs can be obtained by using different sprocket arrangements of the Microsem drive, however travel speed variations will not affect the output.

		A / B / C	A / B / C	A / B / C	A / B / C	A / B / C	A / B / C
#'s per acre		**4.4**	**5.3**	**5.7**	**6.0**	**6.7**	**7.3**
TEMIK 15G	36"	12 / 18 / 12	12 / 15 / 12	12 / 23 / 12	12 / 22 / 20	12 / 12 / 12	12 / 18 / 20
CORNCOB	38"	12 / 15 / 12	12 / 23 / 20	12 / 22 / 20	12 / 12 / 12	12 / 24 / 12	25 / 22 / 12
GRIT	40"	12 / 23 / 20	12 / 22 / 20	12 / 12 / 12	12 / 24 / 12	12 / 18 / 20	12 / 10 / 12
#'s per acre		**7.6**	**8.3**				
		25 / 22 / 12	25 / 20 / 12				
		12 / 10 / 12	12 / 15 / 20				
		25 / 20 / 12	25 / 18 / 12				
#'s per acre		**4.0**	**4.5**	**5.4**	**6.1**	**6.7**	**7.4**
ZENECA FORCE 3G	36"	12 / 20 / 12	12 / 18 / 12	12 / 15 / 12	12 / 12 / 12	12 / 12 / 12	12 / 18 / 20
	38"	12 / 18 / 12	12 / 15 / 12	12 / 23 / 20	12 / 12 / 12	25 / 24 / 12	25 / 22 / 12
	40"	12 / 16 / 12	12 / 23 / 20	12 / 22 / 20	24 / 24 / 12	12 / 18 / 20	25 / 20 / 12
#'s per acre		**8.4**					
		25 / 20 / 12					
		12 / 15 / 20					
		12 / 18 / 12					
#'s per acre		**4.0**	**4.4**	**4.9**	**5.8**	**6.6**	**7.4**
RIDOMIL GOLD GR PC11G	36"	12 / 22 / 12	12 / 20 / 12	12 / 18 / 12	12 / 15 / 12	12 / 22 / 20	12 / 12 / 12
	38"	12 / 20 / 12	12 / 18 / 12	12 / 15 / 12	12 / 23 / 20	12 / 12 / 12	12 / 18 / 20
	40"	12 / 18 / 12	12 / 15 / 12	12 / 23 / 20	12 / 22 / 20	12 / 18 / 20	25 / 22 / 12
#'s per acre		**8.1**					
		12 / 18 / 20					
		25 / 22 / 12					
		25 / 20 / 12					
#'s per acre		**5.1**	**5.8**	**6.4**	**7.1**	**8.5**	**9.5**
GOLD PC	36"	12 / 25 / 12	12 / 22 / 12	12 / 20 / 12	12 / 18 / 12	12 / 15 / 12	12 / 22 / 20
	38"	12 / 22 / 12	12 / 20 / 12	12 / 18 / 12	12 / 15 / 12	12 / 22 / 20	12 / 12 / 12
	40"	12 / 20 / 12	12 / 18 / 12	12 / 15 / 12	12 / 22 / 20	12 / 12 / 12	12 / 18 / 20

MICROSEM INSECTICIDE ASSEMBLY

Standard Microsem Assembly

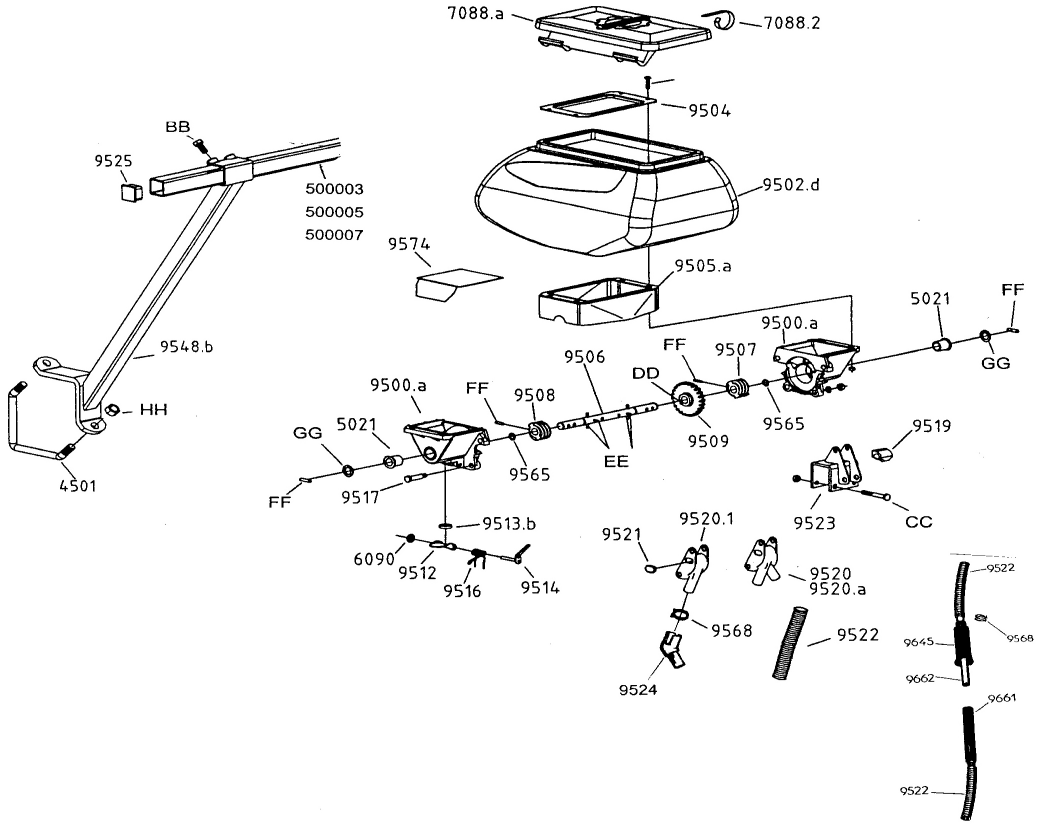

PART No.	DESCRIPTION
4501	V-bolt, 16mm
5021	Self lubricated bushing
6090	Snapring, 6mm
7085.da	Drop tube, right hand
7085.ga	Drop tube, left hand
7088.a	Lid, hopper, with clip (7088.2)
7088.2	Clip, for hopper lid
9500.a	Housing(half), metering unit (replaces old 9500 & 9501 left & right sides)
9502.d	Plastic hopper only, 25 liter, -'03
9504	Steel base (hopper to meter)
9505.a	Rubber skirt
9506	4x35 roll pins)
9507	Worm gear, lft(reqrs 6x25 roll pin)
9508	Worm gear, rht(reqrs 6x25 roll pin)
9509	roll pin)
9512	Trap door (to clean out meter unit)
9513.a	Seal for trap door
9514	Lever for trap door
9516	Spring for trap door
9517	Bolt (fastens housings together)
9519	Rubber plug
9520	Two outlet chute (towards the front)
9520.a	Two outlet chute (towards the rear)

PART No.	DESCRIPTION
9520.1	Single outlet
9521	Rubber plug for side of chute
9522	Hose (specify length)
9523	Clamp/mounting bracket
9524	Elbow for single outlet
9525	End cap for bar
9548.b	Support bar(for mounting to a 5x5 bar)
9548.bs	Support bar(for mounting to a 7x7 bar)
9565	Rubber O-ring
9568	Hose clamp (for 9522)
9574	Plate for hopper (to convert to single outlet)
9645	Protective Sleeve
9661	Female half of sliding drop tube assy
9662	Male half of sliding drop tube assy
500003	Carrier bar, 8' 2" long(1-1/2" square)
500005	Carrier bar, 11' 6" long(1-1/2" square)
500007	Carrier bar, 14' 9" long(1-1/2" square)
AA	10530096 - Phillips head bolt, 6 x 25
BB	F38705 - Hex bolt, 12 x 25
CC	F38623 - Hex bolt, 8 x 60
DD	10172041 - Roll pin, 4 x 25
EE	10172043 - Roll pin, 4 x 35
FF	10172090 - Roll pin, 6 x 25
GG	10622024 - Washer, 16 x 26 x 1
HH	F40179 - 16mm nylon locknut

Twin-Row

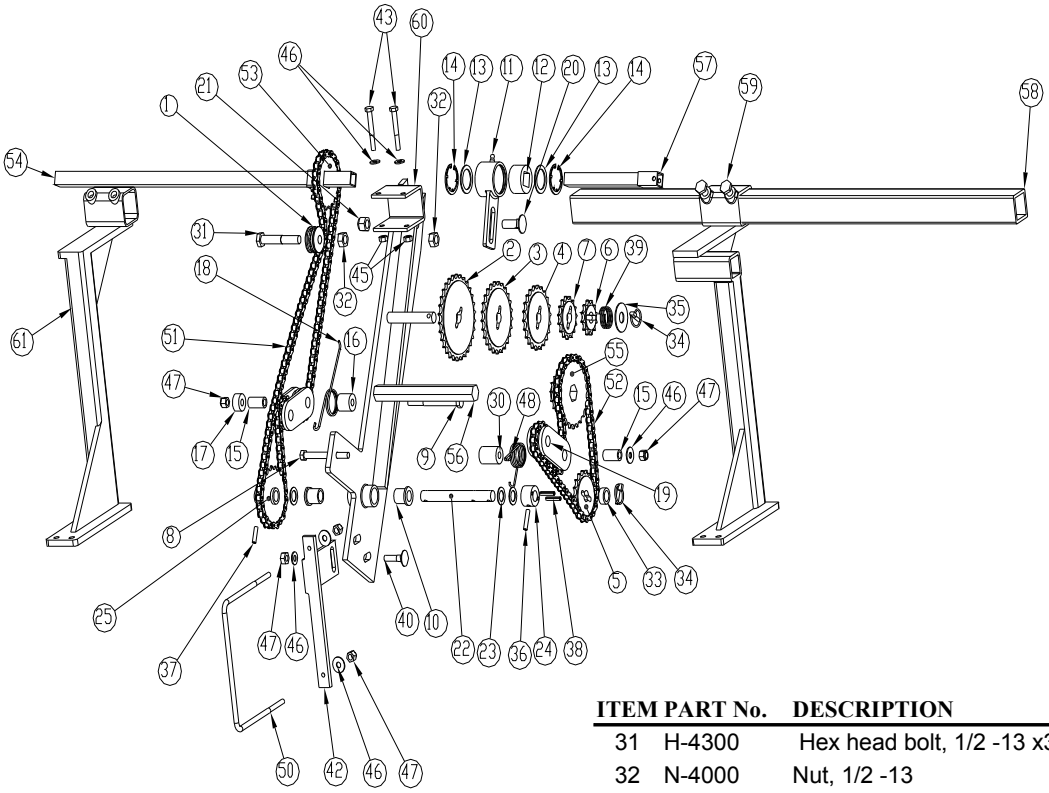

ITEM	PART No.	DESCRIPTION
1	9562	Chain roller
2	9554.21	Interchangeable sprocket, 30T
3	9554.16	Interchangeable sprocket, 25T
4	9554.13	Interchangeable sprocket, 22T
5	9554.9	Interchangeable sprocket, 18T
6	9554.3	Interchangeable sprocket, 12T
7	9554.6	Interchangeable sprocket, 15T
8	H-3320	Hex head bolt, 3/8" -16 x 3 1/2"
9	H-3410	Hex head bolt, 3/8" -16 x 4"
10	5021	Self lubricated bushing
11	E2002	Housing to hold nylon bushing
12	9280	Nylon support bushing
13	10624014	Flat washer, 31x 41x 1
14	4329.A	Snapring 44mm
15	KD1026	Sleeve, 1 3/16" long
16	E2004	Spacer, 1" long
17	E2005	Spacer, .6" long
18	7157	Spring
19	KD11962	Chain idler, plastic
20	CB-4411	Carriage head bolt, 1/2 -13 x 1 1/2"
21	N-2300	Rev lock nut, 1/2 -13
22	9612	Intermediate shaft
23	10622024	Flat washer, 16.5 x26 x1
24	9552	Spacer/driver for sprocket
25	9654	Double intermediate sprocket, 12- 20T
30	E2003	Spacer, 1.4" long

ITEM	PART No.	DESCRIPTION
31	H-4300	Hex head bolt, 1/2 -13 x3"
32	N-4000	Nut, 1/2 -13
33	9559	Bushing
34	9557	Lynch pin
35	W-5410	Flat washer, 5/8 SAE
36	10172091	Roll pin, 6 x 30
37	10172090	Roll pin, 6 x 25
38	10170065	Roll pin, 5 x 30
39	9158	Compression spring
40	CB-2221	Carriage head bolt, 3/8 -16 x 1 1/2"
42	E2007	Mounting strap to 7 x 7 toolbar
43	HM-2865	Hex head bolt, 8 x 60mm
45	NM-1801	Nut, 8mm
46	W-2210	Flat washer, 3/8, USS
47	N-2101	Nylon locknut, 3/8 -16
48	7150	Spring
50	4647.S	U Bolt, 7 x 7, 3/8 -16
51	9553.E	Upper drive chain, 5R, 99 links for 12T driver sprocket, 103 links for 20T
52	9553.F	Lower drive chain, 5R, 60 links for 25T driver spricket, 54 links for 12T
53	9606.A	Sprocket, square drive, 20T
54	9651.09	Female drive conductor tube, 33 1/2"
55	9555.A	Double drive sprocket, hex bore, 12- 25T
56	4520	7/8" Hex shaft
57	9650.09	Male drive connector tube, 33 1/2"
58	9549.13	Carrier bar, 1 1/2" sq., specify length
59	E1011	Support bracket with offset
60	E2001	Transmission main frame
61	E1010	Support bracket

TROUBLE SHOOTING

PROBLEM:

Variations between the outlets or metering boxes.

POSSIBLE CAUSE:

- There may be foreign material mixed with the product
- ATTENTION there may be moisture in the product.
- The metering unit may have been assembled improperly.
- The outlet chute may be warped.
- The hose may be too long or bent, causing the hose to clog.

3-Point Mounted Planters

The Monosem dry fertilizer system is precisely metered by use of an auger. The standard output is adjustable from 80-350 lbs/acre and up to 600 lbs/acre using a high output auger. A non-corrosive plastic hopper with drain plug has a capacity of from 2-row 500 lbs to 12-row 2900 lbs with single, double or ripples outlet hoppers. A flexible knife opener or a double disc opener applies fertilizer from a minimum of 2" to the side of the seed line.

ASSEMBLY AND ADJUSTMENT

The supports (1) of the fertilizer can be attached at two different widths on the hoppers, and can be easily attached to available spots on the bar. See diagram as shown below.

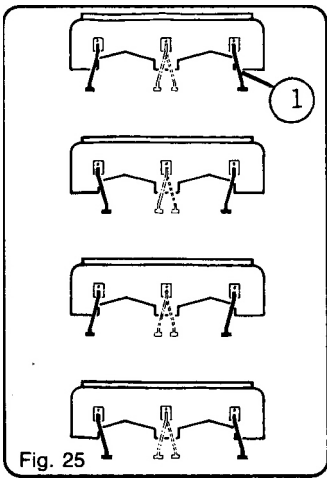

Fig. 25

The drive is normally mounted in the center of the machine, as close as possible to the left side of the gearbox. For narrow inter-row spacing this drive can be placed on the outside of the toolbar frame. In that case, an optional bearing (#4515) can be used.

It is possible (but not necessary) to counter clamp the fertilizer opener clamps to the planting units. The two inner rows cannot always be mounted in this manner because of the hitch brackets. As half of the fertilizer knives are offset to the left and the other half are offset to the right, they can be adjusted as needed.

Note: When using double disc openers the wheels of the tractor must be perfectly centered on the inter-rows or the spring leaves will come in contact with the tires during lifting.

Note: With row spacing of less than 32" (80 cm) the double disc openers are not compatible with the standard semi-automatic hitch. Semi-automatic hitch with short shaft and pin are required, or manual hitch with pins.

Note: If the connector tubes between the hoppers are too long, they can be cut to size.

As an option, a 2-row hopper can feed 3 or 4 outlets, and a 3-row hopper can feed 4, 5, or 6 outlets. The fertilizers are then delivered with a meter specially equipped and plugs to allow certain outlets to be blocked off as desired.

The primary adjustment is set by using the lower double sprocket. **The final adjustment** is made by using one of the sprockets of the upper sprocket cluster. Outputs can thus be obtained between approximately 80 to 350 lbs/acre (80-350 kg/ha).

Different outputs can be obtained by replacing the standard auger painted blue, with a special (optional) high output auger painted red.

Because of the large variety of fertilizers and its density and irregularity of granules, it is impossible to furnish an exact setting chart. To make an initial setting, as a guide only, an output of 80 lbs/acre, approximately between 1.2 lb for each 334 feet (600-650 grams every 100 meters) is obtained with many types of fertilizers using the small lower sprocket cluster and the big upper sprocket cluster.

The placement of the fertilizer should be between 2" and 4" (6 and 10 cm) on the side of the row. A closer placement than what is recommended may cause the plant to burn and curb its growth.

Use the procedure outlined for testing the amount of fertilizer needed.

3-point Mounted Planters

HOW TO TEST FOR FERTILIZER RATES

To test your desired fertilizer to determine lbs/acre use the chart below.
First measure out a distance of 328 feet in a row.

1. Remove one hose from a fertilizer hopper and attach a plastic bag, or other container, under the opening in the hopper.
2. Engage the fertilizer attachment and drive forward the pre-measured distance of 328 feet (100 meters).
3. Weigh the amount of fertilizer caught in the container (in ounces).
4. Find your row spacing on the below chart, locate the approximate ounces and follow the chart up to see the approximate lbs/acre that will be applied at that setting.

CALIBRATION CHART

NOTE: Because all fertilizers do not have the same density and the granules can be irregular, it is impossible to furnish an exact setting chart.

Row Spacing	lbs per acre 80	90	100	110	120	130	140	150	160	170	180	190	200	210	220
22"	14	16	18	20	22	23	25	27	29	31	32	34	36	38	40
30"	20	22	24	27	29	32	34	37	39	42	44	47	49	51	54
36"	24	26	29	32	35	38	41	44	47	50	53	56	59	62	65

APPLICATION RATES

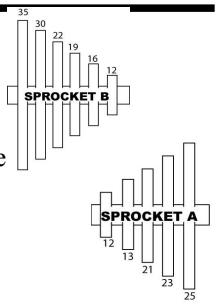

The following rates were calculated with a bulk density of 65 lbs/cubic foot. This chart is for planters that are equipped with contact drive.

IMPORTANT: Fertilizer application rates can vary from the weights calculated in this chart due to different brands, temperature, humidity, etc. These settings are theoretical and approximate. Actual output may vary. To prevent application miscalculations, make a field test

APPLICATION RATES IN LBS/ACRE

A / B	22" Standard Blue Auger	22" High Output Red Auger	30" Standard Blue Auger	30" High Output Red Auger	36" Standard Blue Auger	36" High Output Red Auger	40" Standard Blue Auger	40" High Output Red Auger
12/ 35	92	217	68	160	57	133	51	120
13/ 35	101	238	74	175	62	146	56	131
12/ 30	110	258	81	190	67	158	60	142
13/ 30	116	272	85	200	71	166	64	150
12/ 22	145	340	106	250	88	208	79	187
13/ 22	162	380	119	280	99	233	89	210
21/ 35	165	388	121	285	101	238	91	214
12/ 19	170	401	125	295	105	246	94	221
23/ 35	176	414	130	305	108	254	97	229
13/ 19	185	435	136	320	113	267	102	240
21/ 30	190	448	140	330	117	275	105	248
25/ 35	193	455	142	335	119	279	107	251
12/ 16	202	476	149	350	124	292	111	262
25/ 30	208	490	153	360	128	300	115	270
13/ 16	219	516	162	380	135	317	121	285
25/ 30	225	530	166	390	138	325	125	293
21/ 22	257	605	189	445	158	371	142	334
12/ 12	272	639	200	470	167	392	150	353
23/ 22	283	666	208	490	173	408	156	368
13/ 12	295	693	217	510	181	425	163	383
21/ 19	300	707	221	520	184	433	166	390
25/ 22	306	720	225	530	187	441	169	398
23/ 19	329	775	242	570	202	475	182	428
25/ 19	355	836	261	615	218	512	196	461
23/ 16	387	911	285	670	237	558	214	503
25/ 16	425	999	312	735	260	612	234	551
21/ 12	477	1122	351	825	292	687	263	619
23/ 12	520	1224	383	900	319	750	287	675
25/ 12	566	1333	417	980	347	816	312	735

3-point Mounted Planters

ASSEMBLY

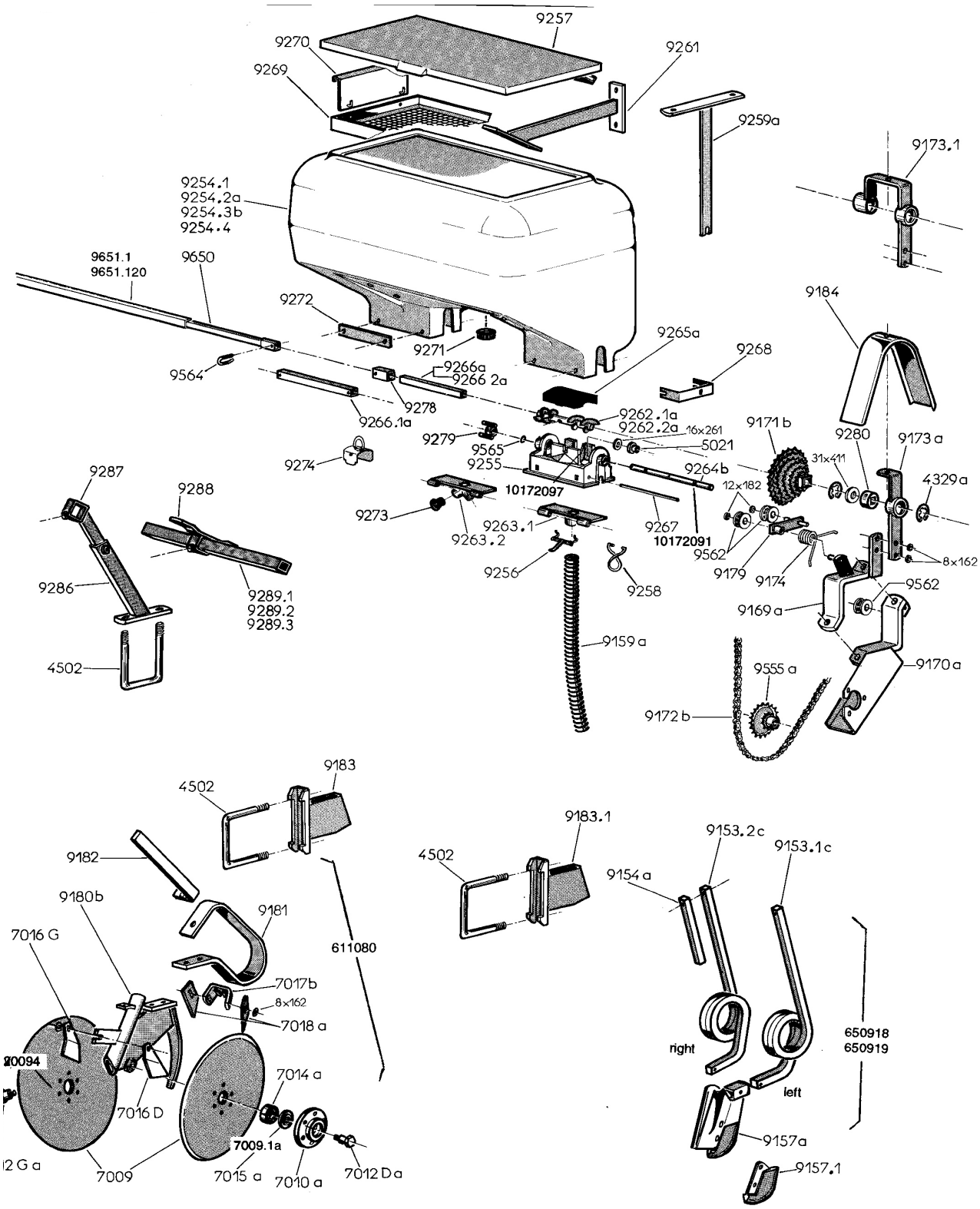

3 point Mounted Planters

ASSEMBLY

PART No.	DESCRIPTION
4329.a	Snapring, internal
4502	U bolt, 16mm
4515	Bearing complete with flangettes
4515.1	Bearing only (205KRRB2)
4515.2	Flangettes (2)
5021	Bushing (self lubricated)
7009	Disc only
7009.1a	Disc complete w/hub & bearing
7010.a	Hub only (mounts with 6x20 bolts)
7012.ga	Lefthand spindle
7012.da	Righthand spindle
7014.a	Bearing
7015.a	Sealing washer
7016.d	Right scraper, inside
7016.g	Left scraper, inside
7017.b	Bracket, for outside scrapers
7018.a	Outside scraper
9153.1c	Tine offset to the left
9153.2c	Tine offset to the right
9154.a	Reinforcement bar
9157.a	Fertilizer knife w/point
9157.1	Replacement cast point (5x34 rivets)
9169.a	Support bracket
9170.a	Clamp bracket
9171.b	Upper sprocket cluster (12-16-19-22-30-35)
9172.b	Chain, 5R (108 links w/conn link)
9173.a	Support bracket for drive shaft (single bushing)
9173.1	Support bracket (double bushing)
9174	Spring
9179	Chain tightener bracket
9180.b	Main housing for assembly
9181	Spring support for discs
9182	Mounting bar
9183	Clamp for disc assembly
9183.1	Clamp for knife assembly
9184	Shield
9254.1	Fertilizer hopper, 1 outlet, 225 lb capacity
9254.2a	Fertilizer hopper, 2 outlet, 400 lb capacity
9254.3a	Fertilizer hopper, 3 outlet (625 lb capacity)
9255	Meter housing, aluminum
9255.asy	Meter assy complete, with High output auger
9256	Spring, trap door
9257.1	Metal lid for 1 outlet hopper
9257.2	Metal lid for 2 outlet hopper
9257.3	Metal lid for 3 outlet hopper
9258	Hose clamp
9259.a	Support, inside 3-row hopper
9261	Support inside hopper

PART No.	DESCRIPTION
9262.1a	Standard auger (blue)
9262.2	High output auger (red)
9262.2a	High output auger (red) w/small ends
9263.1	Trap door - 1 outlet
9263.2	Trap door - 2 outlet
9264.b	Spindle, meter assembly
9265	Auger cover, (9" wide)
9265.a	Auger cover, (4 3/4" wide)
9266.1	Telescoping drive shaft between meters, complete
9266.2	Drive shaft between meters
9267	Hinge for trap door
9268	Hopper reinforce strap (8x18 carriage bolt)
9269.1a	Sieve for 1 outlet hopper
9269.2a	Sieve for 2 outlet hopper
9269.3a	Sieve for 3 outlet hopper
9270	Sieve hanger bracket
9271	Plastic cap
9272	Hopper reinforce strap (8x18 carriage bolt)
9273	Plastic plug for outlet on trap door
9280	Bushing (square hole) supports drive shaft
9286	Fixed mounting bracket
9287	Adjustable mounting bracket
9288	Hopper support bracket
9289.1	Support bar (1'4")
9289.2	Support bar (2' 10")
9289.3	Support bar (4' 6")
9310.02	Drive shaft, hex (inner) (.235cm)
9311.02	Drive shaft, hex (outer) (.215cm)
9311.04	Drive shaft, hex (outer) (.38cm)
9311.05	Drive shaft, hex, (outer) (.52cm)
9525	End cap
9555.a	Lower sprocket cluster (12-25)
9555.2	Lower sprocket cluster (12-13-21-23-25)
9562	Chain idler roller
F38706	Bolt, 12x30
F40179	Nylon locknut, 16mm
10170068	Cotter pin, 5x45
10172065	Roll pin, 5x30
10172093	Roll pin, 6x40
10173018	Roll pin, 8x30
10176003	Rivet, 5x34 countersunk head
10500094	Bolt, 6x20 (mount disc to hub)
10508007	Bolt, 16x30
10561053	Carriage bolt 8x18mm
10562016	Carriage bolt 10x25
10621024	Washer, 13x18x2
10624014	Washer, 31x41x1

PUMP MOUNTING AND HOSE ARRANGEMENT

The squeeze pump is shipped with the discharge manifold in the rearward or non-operating position. Before operating or mounting the pump, position the discharge manifold in the forward or operating position and secure by tightening the wing nuts.

The pump should always be mounted even with or lower than the fertilizer tank for accurate metering. The rate of liquid fertilizer application is determined by the combination of sprockets on the squeeze pump and the drive shafts (see chart). When changing the sprocket combinations, check that the sprockets are in alignment, that the sprocket retaining collars are tight and that the chain tension is restored.

The shut-off valves should be closed to shut off the flow when the pump is not in use, either overnight, or for an extended amount of time. Also close the valves when servicing either the pump or the hoses.

To prolong the life of the hoses, the discharge manifold must be repositioned to the rearward position when not is use to prevent hose distortion.

The discharge pump must be in the forward position when the pump is in operation. To reposition the manifold, loosen the wing nuts and slide the manifold forward and sideways or rearward as required and retighten the nuts.

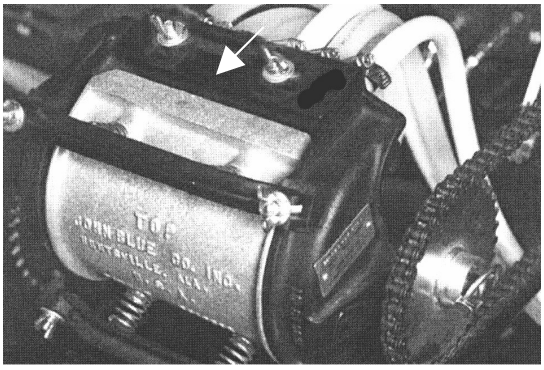

DISCHARGE MANIFOLD REARWARD

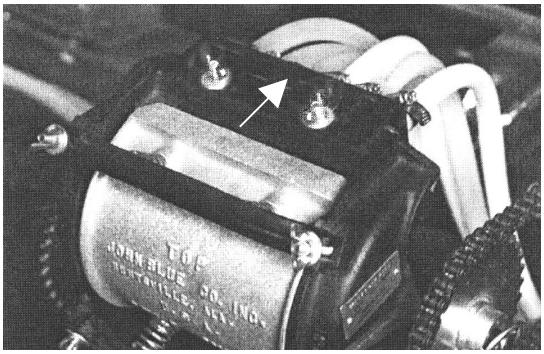

DISCHARGE MANIFOLD FORWARD

WARNING

Agricultural chemicals can be dangerous. Improper use can result in injury to persons, animals, and soil. Handle with care and follow instructions of the chemical manufacturer.

IMPORTANT

If the fertilizer is placed too close to the seed, it may cause germination or seedling damage especially if used in amounts in excess of the fertilizer manufacturer's recommendations. Check with your fertilizer dealer or manufacturer for the correct amount and placement of fertilizer.

3-point Mounted Planters

DELIVERY RATE CHART

The following delivery rate chart provides an approximate application rate only. Actual delivery will vary with temperature and the type of fertilizer being used.

Chart is shown in gallons per acre. This chart is for a pump with a ½" hose. For settings with a 5/16" hose, cut gal/acre in half.

8 Tooth Driver Sprocket

Sprocket Part #	Driven	40"	38"	36"	30"
L-1383	8	21.9	23.1	23.9	29
L-1384	9	19.1	20.4	21.0	25.3
L-1385	10	17.2	18.3	18.9	22.7
L-1386	15	11.4	12.1	12.5	15.
L-1381	20	8.6	9.1	9.4	11.3
L-1387	22	7.7	8.2	8.5	10.2
L-1388	23	7.5	8.0	8.3	9.6
L-1389	26	6.7	7.1	7.3	8.8
L-1390	30	5.8	6.2	6.4	7.7
L-1391	31	5.6	5.9	6.1	7.4
L-1392	32	5.5	5.8	6	7.3

Gallons per Acre

15 Tooth Driver Sprocket

L-1383	8	40.0	43.0	44.5	53.3
L-1384	9	35.9	38.2	39.5	47.4
L-1385	10	32.2	34.3	39.5	42.6
L-1386	15	21.5	22.9	23.6	28.4
L-1381	20	16.1	17.1	17.7	21.3
L-1387	22	14.6	15.6	16.1	19.3
L-1388	23	14.0	14.9	15.4	18.4
L-1389	26	12.5	13.3	13.7	16.5
L-1390	30	10.7	11.4	11.8	14.2
L-1391	31	10.3	11.0	11.3	13.6
L-1392	32	10.1	10.7	11.1	13.3

Gallons per Acre

OPTIONAL PISTON PUMP

If the machine is equipped with the piston pump option, the rate of liquid fertilizer application is determined by the piston pump settings.

To adjust delivery rate, loosen the 3/8" lock nut that secured the arm with the pointer and rotate the scale flange until the pointer is over the desired scale setting. The adjustment wrench will facilitate rotation of the scale flange. Tighten the 3/8" lock nut being careful not to over tighten.

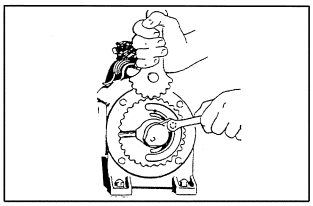

CLEANING

The tanks and all hoses are made of sturdy plastic and rubber to resist corrosion. However, the tanks, hoses and metering pump should be thoroughly cleaned with water at the end of the planting season or prior to an extended period of non-use. Do not allow fertilizer to crystallize due to cold temperature or evaporation.

On machines equipped with the piston pump, the strainer located between the piston pump and ball valve should be taken apart and cleaned daily. Remove the end cap to clean the screen

PISTON PUMP STORAGE

KEEP AIR OUT OF THE PUMP! This is the only way to prevent corrosion. Even for short periods of storage, the entrance of air into the pump will cause RAPID AND SEVERE CORROSION.

Overnight Storage

Suspension Fertilizer must be flushed from the pump for ANY storage period.

Winter Storage

1. Flush pump thoroughly with 5 to 10 gallons of fresh water and circulate until all corrosive salts are dissolved in the pump.
2. With the pump set on 10, draw in a mixture of half diesel fuel and half 10 weight oil until the discharge is clean. Then plug inlet and outlet

PISTON PUMP APPLICATION RATES

Pump Setting	2	3	4	5	6	7	8	9	10
4-row 30”	13	19	26	32	38	45	51	58	64
4-row 36”	11	16	21	27	32	37	43	48	54
4-row 38”	10	15	20	26	30	35	41	46	51
6-row 30”	9	13	17	21	25	30	35	39	43
6-row 36”	7	11	14	18	21	25	29	32	36
6-row 38”	7	10	13	17	20	24	27	31	34
8-row 30”	7	10	13	16	19	23	26	29	32
8-row 36”	5	8	11	13.5	16	19	21.5	24	27
8-row 38”	5	7	10	13	15	18	20	23	25
12-row 30”	4	6.5	8.5	11	13	15	17	19.5	21
12-row 36”	4	5.5	7	9	11	12.5	14.5	16	18
12-row 38”	3	5	6.5	8.5	10	12	13.5	15	17

The above chart is for planters equipped with ground drive wheels that have 7.60 x 15 tires , 26 tooth drive sprocket, and a 22 tooth driven. This chart is based on average wheel slippage and liquid viscosities. This chart is also based on standard pump sprockets of 30 tooth drive and 16 tooth driven. Other sprockets are available.

Measure and weigh one gallon of actual fertilizer solution to determine exact application rates. This chart was calculated based on a solution weighing 10 pounds per gallon.

IMPORTANT: Fertilizer application rates can vary from the above chart. To prevent application miscalculation, make field checks to be sure you are applying fertilizer to all rows at the desired rate.

NOTE: Flow to all rows should be checked periodically. If one or more lines are plugged, the desired rate will be delivered to the remaining rows keeping total application rate at desired rate.

To check the exact number of gallons your fertilizer attachment will actually deliver on 30” row spacing, proceed as follows:

1. Remove the hose from one of the fertilizer openers and insert it into a collection container that has been secured to the planter frame.
2. Engage the fertilizer attachment and drive forward for 174’.
3. Measure the fluid ounces caught in the container and multiply that amount by 100.
4. Divide that amount by 128.
5. The result will be the gallons of fertilizer delivered per acre when planting in 30” rows. Rinse the collection container and repeat test on other rows if necessary. To convert this delivery rate for wider rows, multiply by the following conversion factors:

   For 36” rows, multiply by .83 by result
   For 38” rows, multiply by .79 by result

SQUEEZE PUMP ASSEMBLY

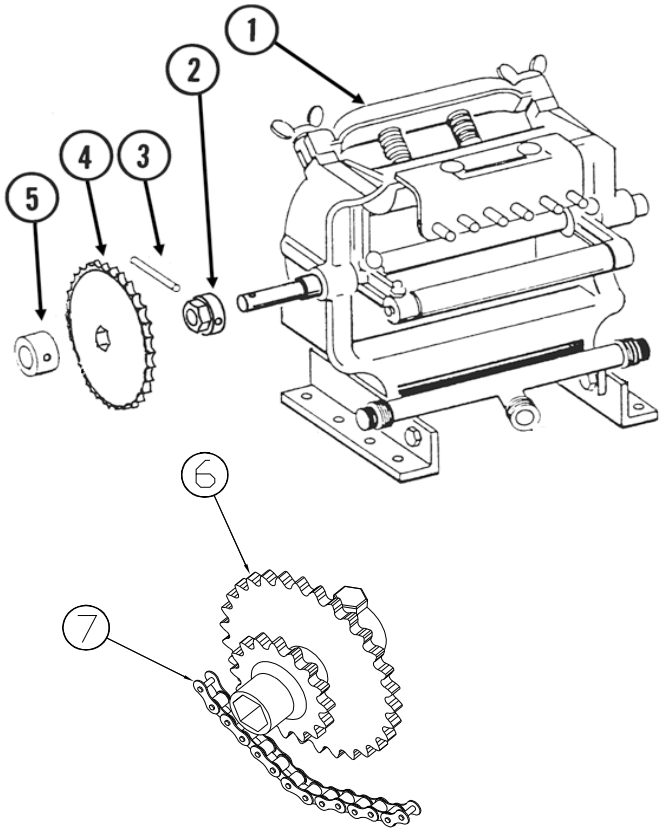

ITEM	PART No.	DESCRIPTION
1	JBL6C	SQUEEZE PUMP 2 - 6 ROWS
	JBL8LC	SQUEEZE PUMP 8 ROWS
	JBL12C	SQUEEZE PUMP 12 ROWS
2	MPL1414	7/8" SPROCKET ADAPTER
3	F64286	SPRING PIN 5/16 X 2-1/4"
4	MPL1381	SPROCKET, 20 TOOTH
	MPL1383	SPROCKET, 8 TOOTH
	MPL1384	SPROCKET, 9 TOOTH
	MPL1385	SPROCKET, 10 TOOTH
	MPL1386	SPROCKET, 15 TOOTH
	MPL1387	SPROCKET, 22 TOOTH
	MPL1388	SPROCKET, 23 TOOTH
	MPL1389	SPROCKET, 26 TOOTH
5	MPL4414	7/8" SPROCKET RETAINER
6	MPL3016	DOUBLE SPROCKET, 16-30T
7	MPL2040A	DRIVE CHAIN 4 FT.

TROUBLESHOOTING

PROBLEM: Pump hard or impossible to prime
POSSIBLE CAUSE SOLUTION
Valves fouled or in wrong place. Inspect and clean valves.
Air leak in suction line. Repair leak.
Pump is set too low. Adjust pump setting.
Packing washers are worn out. Replace.

PROBLEM: Low metering.
POSSIBLE CAUSE SOLUTION
Valves are fouled or in wrong place. Inspect and clean valves.
Air leak in suction line. Repair leak.
Pump is set too low. Adjust pump setting.
Broken valve spring. Replace spring.

PROBLEM: Over meters.
POSSIBLE CAUSE SOLUTION
Broken discharge valve spring. Replace spring.
Trash is under valves. Inspect and clean valves.
Improper rate setting. Adjust pump setting.

PROBLEM: Leaks through when stopped.
POSSIBLE CAUSE SOLUTION
Broken discharge valve spring. Replace spring.
Trash is under valves. Inspect and clean valves.

PROBLEM: Fertilizer solution leaking under stuffing box.
POSSIBLE CAUSE SOLUTION
Packing washers are worn out. Replace.

PROBLEM: Pump is using excessive oil.
POSSIBLE CAUSE SOLUTION
Oil seals or o-ring worn and leaking. Replace.

PROBLEM: Pump operates noisily.
POSSIBLE CAUSE SOLUTION
Crankcase components worn excessively. Inspect and replace if necessary.